DIGITAL OUTSIDE MICROMETER WITH INTERCHANGEABLE ANVILS

IP54 WATERPROOF

DATA OUTPUT

3506-100A

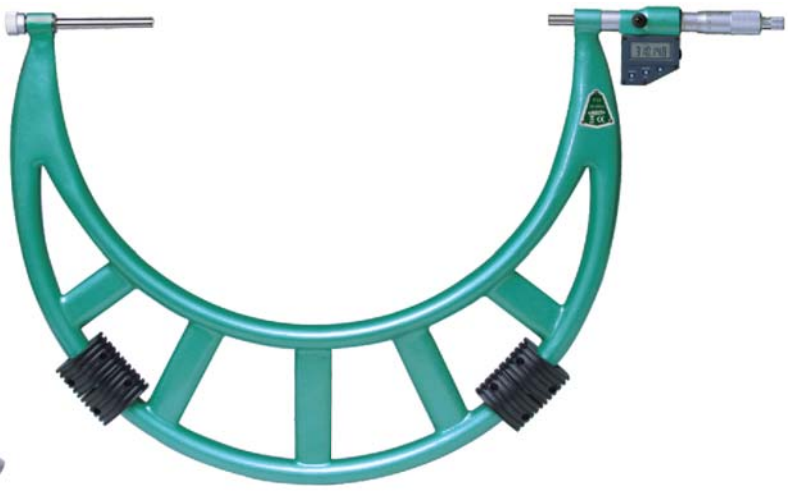

3506-400A

Unit: mm

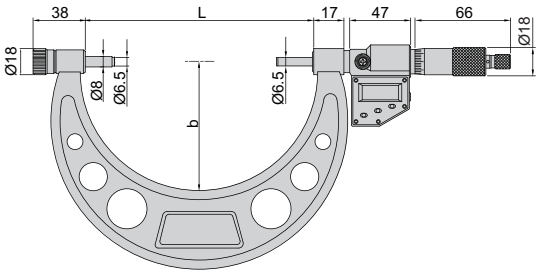

type A

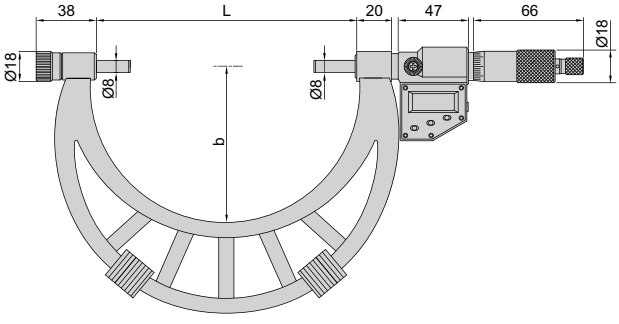

type B

interchangeable anvils
for different measuring ranges

(mm)

Code	Range	Type	Accuracy	L	b
3506-100A	0-100mm/0-4"	A	±5µm	105	57
3506-150A	0-150mm/0-6"	A	±6µm	155	82
3506-300A	150-300mm/6-12"	A	±8µm	305	165
3506-301A	200-300mm/8-12"	A	±8µm	305	165
3506-400A	300-400mm/12-16"	B	±9µm	405	224
3506-500A	400-500mm/16-20"	B	±11µm	505	275
3506-600A	500-600mm/20-24"	B	±12µm	605	321
3506-700A	600-700mm/24-28"	B	±13µm	705	371
3506-800A	700-800mm/28-32"	B	±15µm	805	426
3506-900A	800-900mm/32-36"	B	±16µm	905	476
3506-1000A	900-1000mm/36-40"	B	±17µm	1005	576

- Resolution 0.001mm/0.0001" (resolution of **3506-100A** and **3506-150A** is 0.001mm/0.00005")
- IP54 dust/waterproof
- Button function: on/off, set, mm/inch, ABS/INC, data output
- Data output
- SR44 or LR44 battery, automatic power off
- Ratchet stop
- Carbide measuring faces
- Supplied with setting standards
- Optional accessory: data output system