Fairview Microwave
RF COMPONENTS ON DEMAND. Done!

# FMCP1074
# DATA SHEET

## 7/16 DIN Directional Coupler 30 dB Coupled Port From 698 MHz to 2.7 GHz Rated To 200 Watts

The FMCP1074 is a 30 dB direction coupler with 7-16 DIN Female connectors rated to 200 watts CW. Insertion loss is a low 0.25 dB. The total path loss (including accuracy, frequency variations, dissipative loss and theoretical loss due to coupling) is 0.27 dB.

Fairview Microwave's family of Low PIM couplers are tapered designs that cover the 698 to 2,700 MHz frequency range. Offered in a broad range of coupling values to allow flexibility in the design of your low PIM system: 6, 10, 15, 20, and 30 dB. Especially designed and manufactured for the rigors of low PIM systems, this family of couplers is rated at an average power of 200 watts CW, and have PIM performance of -155 dBc or better. They can be used indoor or outdoor as they meet the moisture requirements of IP65. If higher power is needed please consider Fairview Microwave's unequal tappers. All couplers are available in four different connector types: N, DIN 7-16, MiniDIN 4.3-10, and MiniDIN 4.1-9.5.

### Features:

- Low PIM (-155 dBc)
- 200 watts CW Rating
- 698 – 2,700 MHz
- 30 dB Coupling Factor
- VSWR 1.23 Maximum
- 7/16 DIN Female Connector

### Applications:

- Indoor/Outdoor Use (IP65)
- Base Station
- 4G/AWS/PCS
- Low PIM
- Distributed Antenna Systems (DAS)
- Wireless Infrastructure

### Electrical Specifications

| Description | Min | Typ | Max | Units |
|---|---|---|---|---|
| Frequency Range | 0.698 | | 2.7 | GHz |
| Impedance | | 50 | | Ohms |
| Coupling | | 30 ±2 | | dB |
| Freq. Sensitivity | | | 0.6 | dB |
| Main Line Loss | | | 0.27 | dB |
| Insertion Loss | | | 0.25 | dB |
| Directivity | 20 | | | dB |
| Main Line VSWR | | | 1.23:1 | |
| Sec. Line VSWR | | | 1.29:1 | |
| Passive Intermodulation 2x20W | | | -155 | dBc |
| Input Power (CW) | | | 200 | Watts |

Electrical Specification Notes:
Values at 25°C, sea level.

### Mechanical Specifications

**Size**

| | |
|---|---|
| Length | 5.58 in [141.73 mm] |
| Width/Dia. | 1 in [25.4 mm] |
| Height | 2.45 in [62.23 mm] |
| Weight | 1.8266 lbs [828.53 g] |

**Configuration**

| | |
|---|---|
| Package Type | Connectorized |
| Input Connector | 7/16 DIN Female |
| Output Connector | 7/16 DIN Female |
| Coupled Connectors | 7/16 DIN Female |

### Environmental Specifications

**Temperature**

| | |
|---|---|
| Operating Range | -20 to +55 deg C |

Fairview Microwave
1130 Junction Dr. #100
Allen, TX 75013
Tel: 1-800-715-4396 / (972) 649-6678
Fax: (972) 649-6689
www.fairviewmicrowave.com
sales@fairviewmicrowave.com


Copyright © 2016

**Compliance Certifications** (visit www.FairviewMicrowave.com for current document)

| | |
|---|---|
| RoHS Compliant | Yes |
| REACH Compliant | 12/17/2015 |

## Plotted and Other Data

Notes:

- Values at 25°C, sea level.

### Typical Performance Data

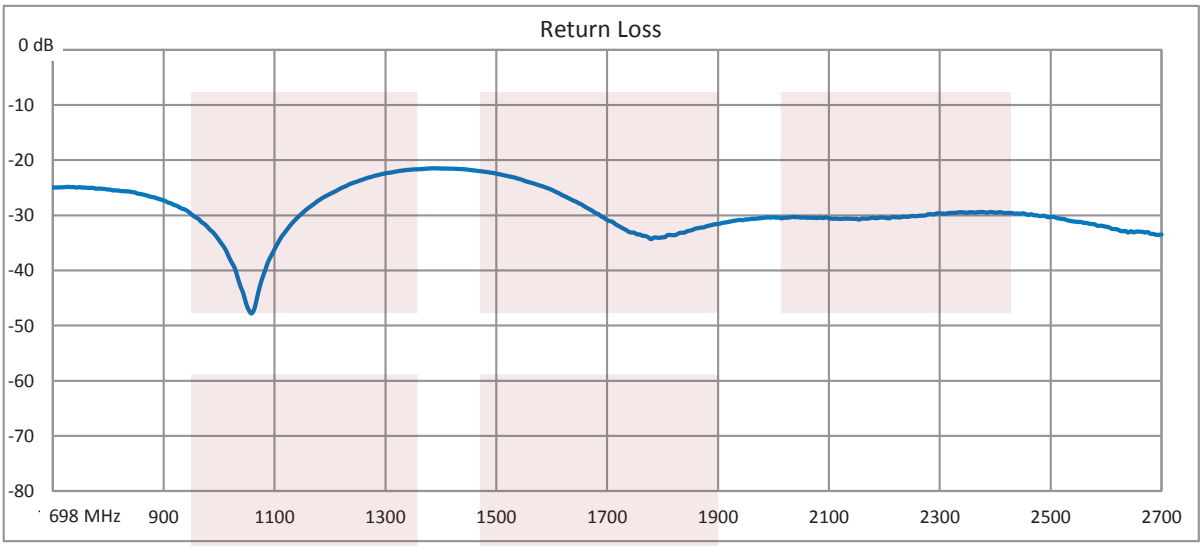


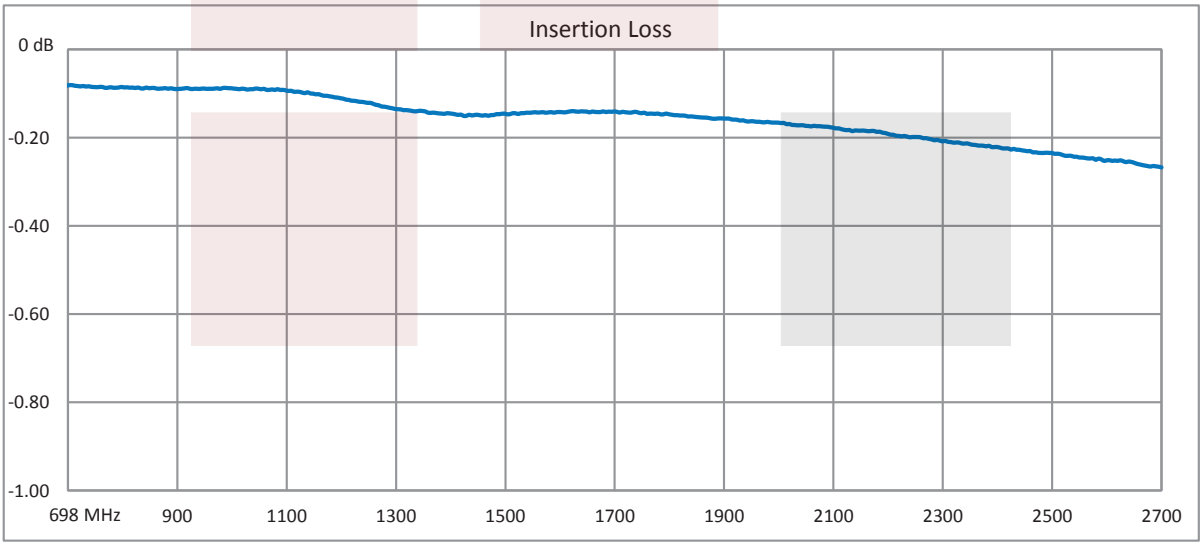




Copyright © 2016

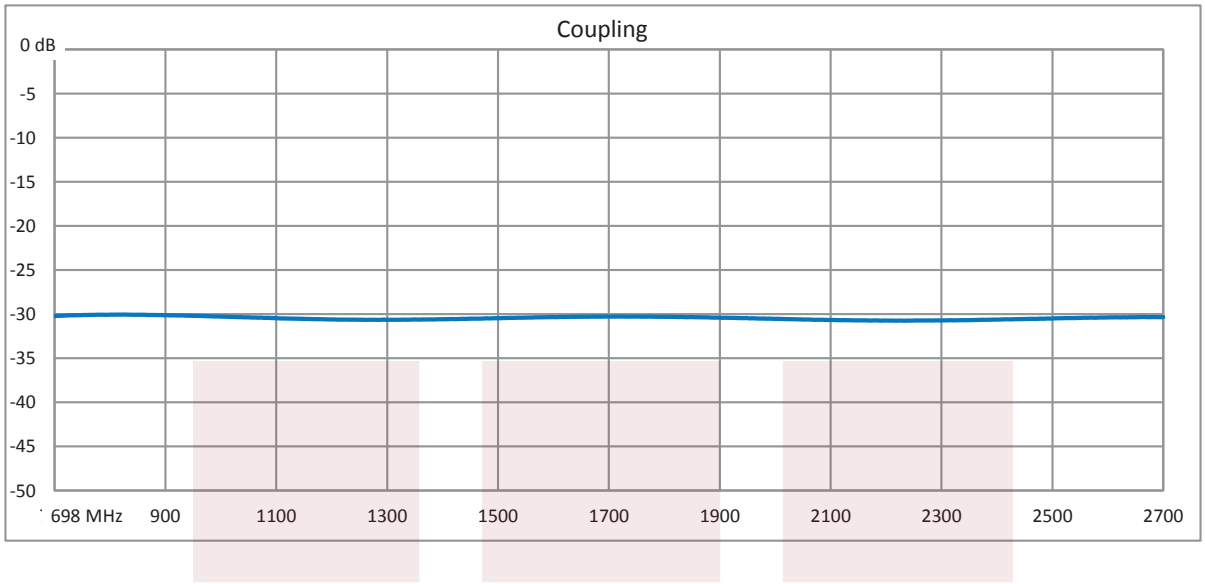


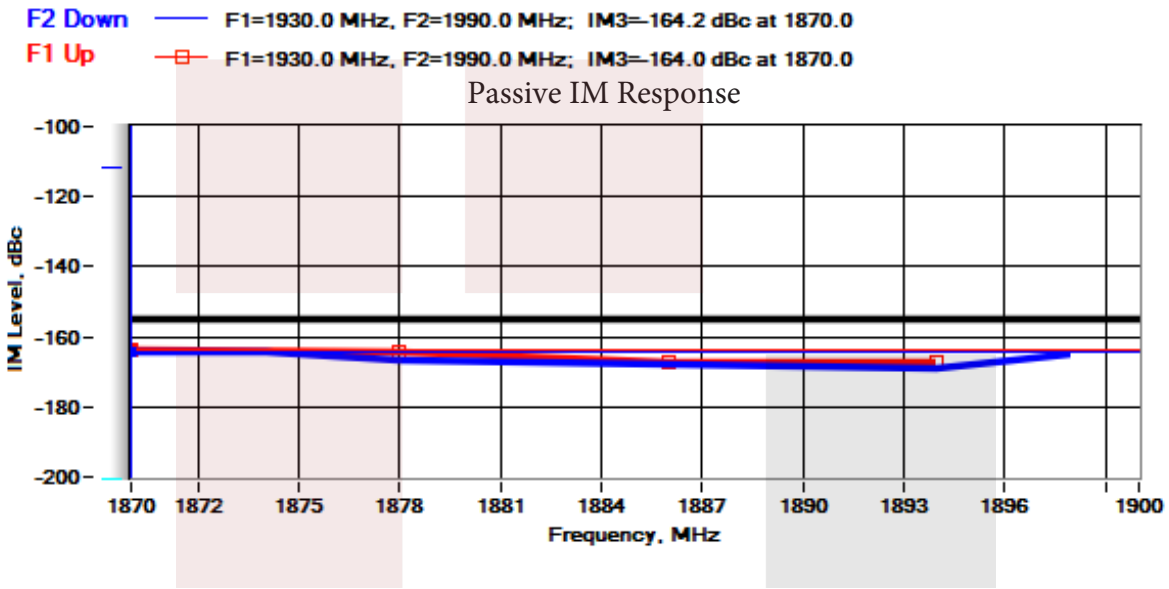


7/16 DIN Directional Coupler 30 dB Coupled Port From 698 MHz to 2.7 GHz Rated To 200 Watts from Fairview Microwave is in-stock and available to ship same-day. All of our RF/microwave products are available off-the-shelf from our ISO 9001:2008 certified facilities in Allen, Texas. Fairview Microwave is RF on-demand.

For additional information on this product, please click the following link: 7/16 DIN Directional Coupler 30 dB Coupled Port From 698 MHz to 2.7 GHz Rated To 200 Watts FMCP1074

URL: https://www.fairviewmicrowave.com/7-16-din-directional-coupler-30-db-2.7-ghz-200-watts-fmcp1074-p.aspx

The information contained in this document is accurate to the best of our knowledge and representative of the part described herein. It may be necessary to make modifications to the part and/or the documentation of the part, in order to implement improvements. Fairview Microwave reserves the right to make such changes as required. Unless otherwise stated, all specifications are nominal. Fairview Microwave does not make any representation or warranty regarding the suitability of the part described herein for any particular purpose, and Fairview Microwave does not assume any liability arising out of the use of any part or documentation.

1130 Junction Dr. #100 Allen, TX 75013 | Tel: 1-800-715-4396 / (972) 649-6678 / Fax: (972) 649-6689

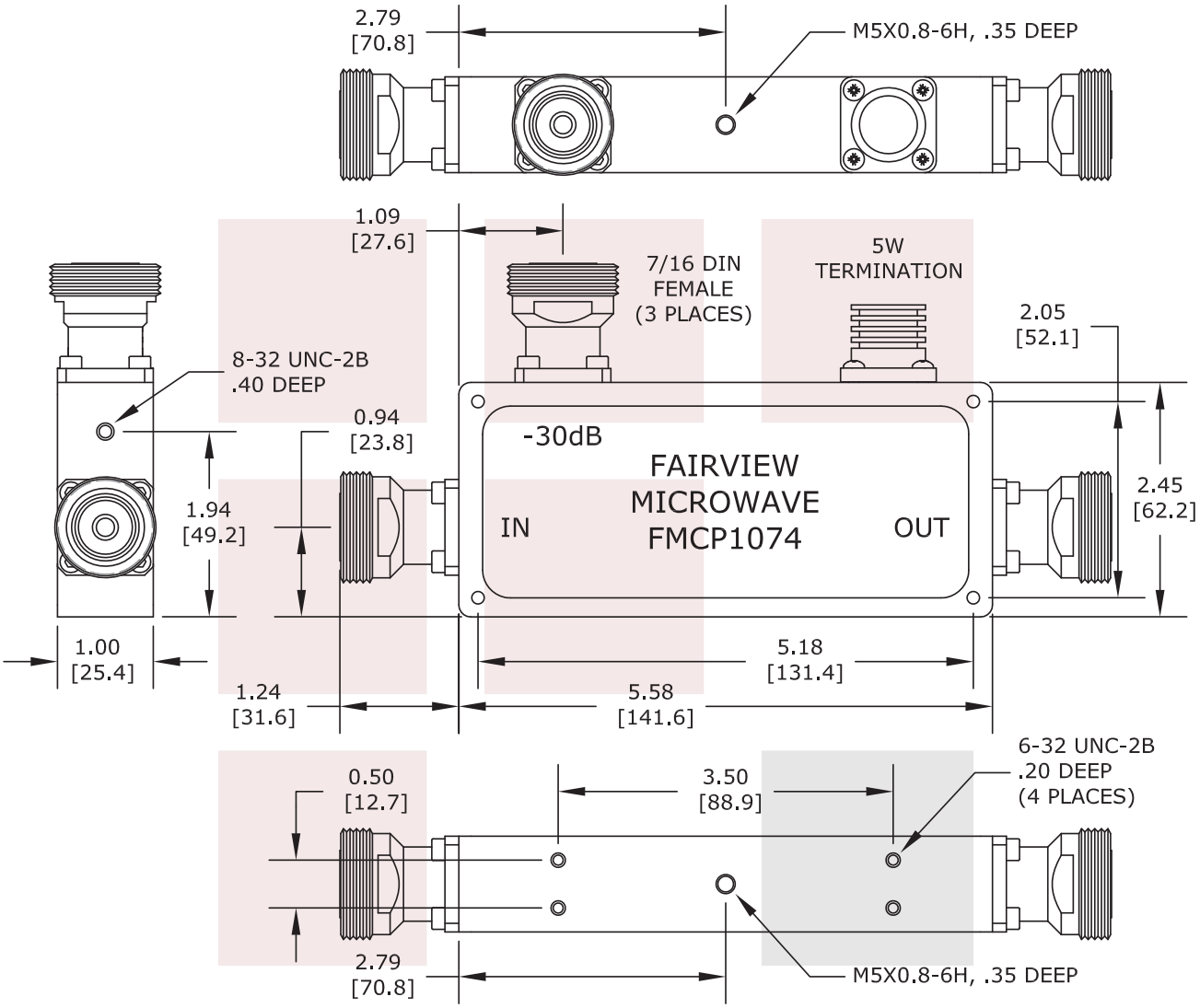


UNLESS OTHERWISE SPECIFIED:
DIMENSIONS ARE IN: inches
TOLERANCES ARE: [mm]
HOLE TOLERANCE: X.XXX ± .003 [±.076]
LENGTH TOLERANCE: X.XXX ± .010 [±.254]
LENGTH TOLERANCE: X.XX ± .030 [±.762]

* THESE DIMENSIONS AND TOLERANCES SUPERSEDE NOTE #1 ON TITLE BLOCK.

| | | | | | |
|---|---|---|---|---|---|
| FAIRVIEW MICROWAVE INC.<br>ALLEN, TX 75013 WWW.FAIRVIEWMICROWAVE.COM | NOTES:<br>1. UNLESS OTHERWISE SPECIFIED ALL DIMENSIONS ARE NOMINAL.<br>2. ALL SPECIFICATIONS ARE SUBJECT TO CHANGE WITHOUT NOTICE AT ANY TIME.<br>3. DIMENSIONS ARE IN INCHES [mm]. | | | | |
| TITLE<br>7/16 DIN Directional Coupler 30 dB Coupled Port From 698 MHz to 2.7 GHz Rated To 200 Watts | DWG NO<br>FMCP1074 | | CAGE CODE<br>3FKR5 | | |
| | CAD FILE 060216 | SHEET | SCALE N/A | SIZE A | 2233 |

1130 Junction Dr. #100 Allen, TX 75013 | Tel: 1-800-715-4396 / (972) 649-6678 / Fax: (972) 649-6689

Copyright © 2016