DOC023.52.03253

1200-S sc digital combined electrode for pH and Redox

User Manual

02/2013 Edition 2A

UNITED FOR WATER QUALITY

Table of contents

Section 1 Specifications

1.1 Technical data on the 1200-S sc - pH / ORP sensor

Materials	Stainless steel metal housing
Enclosure rating	IP 68; stainless steel metal housing
pH measuring range	0 pH ... 14 pH
ORP measuring range	–1,500 ... 1,500 mV
Temp. measuring range	–5 °C ... 50 °C
Storage temperature Sensor and controller	–20 °C ... 60 °C; 95 % relative humidity, non-condensing
pH / ORP response time	< 15 s; T90
Temp. response time	< 2 min; T90
pH measuring accuracy	± 0.02 pH
ORP measuring accuracy	± 1.2 mV
Temp. measuring accuracy	± 0.2 °C
Reproducibility	± 0.5 % of the end value of the measuring range
Sensitivity	± 0.5 % of the end value of the measuring range
Calibration, pH	One or two point, standard buffer solution (automatic), One or two point, comparative measurement
Calibration, ORP	One point, comparative measurement
Calibration, temp	One point, comparative measurement
Max. immersion depth / pressure for the sensor	20 m / 2 bar over-pressure
Maximum flow speed	4 m/s
Sensor interface	MODBUS
Sensor cable	10 m, hard wired, polyurethane
Sensor weight	<1 kg
Sensor dimensions (Ø × L)	42 × 504 mm
Fastening	• Immersed pipe • Chain
Service life measuring electrode	Approx. 1 year
Sensor power	< 7 W

Specifications are subject to change without notice.

Section 2 General information

2.1 General handling instructions

CAUTION!
The sensor will only work correctly when the tip of the probe is completely immersed in liquid. The measuring probe must not be stored dry for more than approx. 10 minutes or protrude from the medium to be measured. Use the transport cap during the installation of the sensor, during maintenance and when transporting, and fill the cap with 3 mol. KCl or pH 4 buffer solution.

CAUTION!
Potential danger with contact with chemical/biological substances. Working with chemical samples, standards and reagents can be dangerous. Make yourself familiar with the necessary safety procedures and the correct handling of the chemicals before use and read and follow all relevant safety data sheets.

2.2 Applications

The sensor makes it possible to simply and exactly measure pH directly in aqueous solutions.

Typical applications include

- Inlet and / or outlet of a sewage treatment plant
- Activated sludge tanks or
- Surface water (rivers, streams or lakes).

Various different possible installations enable the system to be adapted to a very wide range of conditions.

2.3 Measuring principle

2.3.1 pH measurement

pH is the negative logarithm of the hydrogen ion activity as well as a measurement of the acidic or alkaline content of a solution:

$$pH = -\log10 [aH+]$$

The pH value is normally measured using a glass electrode and a reference electrode. In this case the glass electrode acts as the transducer that converts the chemical energy (hydrogen ion activity) into electrical energy (measured in millivolts). The reaction is symmetrical and the electrical circuit is closed by the ion flow from the reference solution to the test solution.

Together with the reference solution, the electrode generates a voltage (EMF). The magnitude of the voltage is dependent on the type of reference electrode, the internal design of the glass electrode, the pH value of the solution as well as the temperature.

This voltage is expressed by the following Nernst equation:

$$E = Eo – (2.3\ RT/F) x \log a[H+]$$
$$E = Eo – (\text{gradient}) x \log a[H+]$$

Where the following applies:

E	=	EMF value of the cell
Eo	=	Zero voltage (isopotential) of the system (depends on the internal design of the glass electrode and reference electrode)
R	=	Gas constant
T	=	Temperature in Kelvin
a[H+]	=	Activity of the hydrogen ions (corresponds to the concentration of the hydrogen ions)
F	=	Faraday constant

With every unit change in the pH (or decimal change in the ion concentration), the EMF produced by the pair of electrodes changes by 59.16 mV at 25 °C. This value is termed the gradient of the electrode.

The pH electrode pair is calibrated using solutions with a known and constant hydrogen ion concentration. These solutions are termed buffer solutions. The buffer solutions are used for the calibration of both the electrode isopotential and the gradient.

2.3.2 REDOX measurement

In a Redox system the measurements are made using a balanced instrument that comprises a Redox electrode and a reference electrode. The potential to be measured is termed the Redox potential and depends on the relationship between the activities of the two components of a Redox system and the number of electrons transferred. In many cases, the pH value of the solution also affects the potential.

The half-cell potential εB of the reference electrode has a large effect on the potential E of the measuring chain. To rectify this effect, the potential of the measuring electrode can be referred to the hydrogen electrode. If εB is the half-cell potential of the reference electrode used, the calculation is performed using the following formula:

$$\varepsilon(H) = E + \varepsilon B$$

ε(H)	=	EMF value of the cell
εB	=	Half-cell potential

Such standardised Redox potentials provide a certain amount of information on the oxidisation or reduction potential of a Redox system. Increasing positive values indicate increasing oxidation energy. The more negative the potential, the higher the reduction energy. The area that is of interest in practice is between +1500 and –1000 mV.

Standard potentials for a Redox system for aOx = aRed (a=activity) and for pH = 0 can be defined. This is turn corresponds to a standardised hydrogen ion activity of aH+ = 1 mole per litre.

The stability and ability to reverse a Redox system have a significant effect on the reproducibility of the Redox potential measured.

Prior to unpacking, commissioning or operating the instrument, read all of this manual.

Please pay particular attention to all instructions on hazards and safety. Otherwise there is a risk of serious injury to the operator or damage to the instrument, or pollution.

The sensor is only allowed to be installed and used as per the instructions in this manual.

3.1 Possible sources of hazards

During the operation or calibration of the sensor, there exist the following sources of hazards if the safety instructions are not observed:

- Potentially hazardous materials (buffer solutions, flow of sample)

In all circumstance observe the safety data sheets and the applicable health and safety instructions.

3.2 Safety symbols

All stickers and labels on the instrument are to be observed. Otherwise injuries, pollution or damage to the instrument may occur.

	This symbol, if present on the instrument, refers to information in the operating instructions on safe operation and / or instructions that provide safety information.
	This symbol, if present on a housing or a protective cover, identifies the risk of an electric shock (which may under certain circumstances be fatal). Only personnel qualified for working on hazardous voltages are allowed to open the enclosure or remove the protective cover.
	This symbol, if present on the instrument, identifies the location of a fuse or current limit.
	This symbol, if present on the instrument, identifies a part that may become hot and must not be touched without taking precautions.
	This symbol, if present on the instrument, indicates the presence of components that could be damaged by electrostatic discharge. Appropriate precautions are to be taken.
	This symbol, if present on the instrument, indicates the presence of dangerous chemical substances. Chemicals are only allowed to be handled and maintenance on devices for supplying chemicals is only allowed to be performed by personnel qualified and trained for working with chemicals.

	This symbol, if present on the instrument, indicates that safety glasses must be worn.
	This symbol, if present on the instrument, identifies the location of the connection for the protective earth (ground).
	As of 12 August 2005, electrical appliances marked with this symbol are no longer allowed to be disposed of in Europe in unsorted household or industrial waste. As per the applicable regulations (EU directive 2002/96/EC), from this date on consumers in the EU must return old appliances to the manufacturer for disposal. This disposal is free of charge for the consumer. ***Note:*** *You can obtain instructions on the correct disposal of all (marked and unmarked) electrical products that have been supplied or manufactured by Hach-Lange from your local Hach-Lange sales office.*

3.3 Electrical safety measures and fire prevention measures

The following safety instructions must be observed during the installation and repair of cables that carry electrical power:

DANGER!
Sensors and controller are designed for compliance with the U.S. and Canadian NEC as well as the European low voltage directive. No internal electrical or electronic parts are allowed to be modified in any way, as this could render the CE conformity void.

WARNING!
Only qualified experts may perform the tasks described in this section of the manual, while adhering to all locally valid safety regulations.

- Prior to maintenance or repair of the instrument, isolate it from the power supply.
- When making electrical connections, all applicable local and national regulations are to be met.
- The use of earth leakage trips is strongly recommended.
- The instrument must be correctly earthed for correct operation.

3.4 Chemical safety measures

CAUTION!
Reference and standard solutions are used for the calibration. Some of these compounds are toxic or caustic.

Potential danger with contact with chemical/biological substances. Working with chemical samples, standards and reagents can be dangerous. Make yourself familiar with the necessary safety procedures and the correct handling of the chemicals before use and read and follow all relevant safety data sheets.

Physical contact with a calibration solution and inhalation of vapours from a calibration solution are to be avoided or limited to an absolute minimum.

3.5 Safety measures related to the flow of sample

The assessment of the possible hazards from the individual sample flows is the responsibility of the user. Suitable safety measures are to be taken to avoid any unnecessary contact with a flow of sample of unknown composition in relation to the hazards due to traces of chemicals, radiation or biological effects.

4.1 Connecting the sensor cable

You can connect the sensor cable to the controller very easily using the plug. Retain the protective cap for the socket in case you need to remove the sensor in the future. Connecting cables are available in the lengths 5 m, 10 m, 15 m, 20 m, 30 m and 50 m. From a length of 100 m a bus termination box must be integrated (see Section 8 on page 25).

Fig. 1 Connection of the sensor plug to the controller

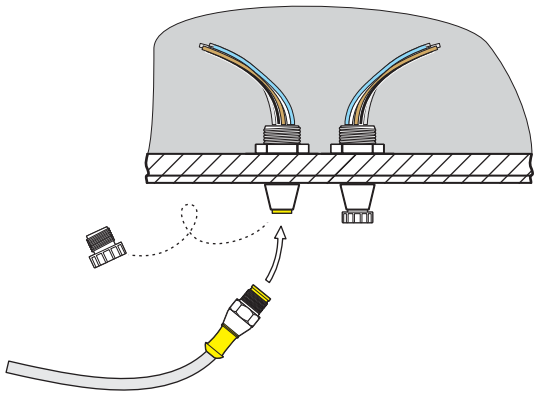

Fig. 2 Sensor connector pin assignment

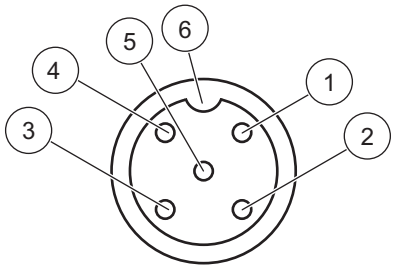

Number	Description	Cable colour
1	+12 VDC	brown
2	Ground	black
3	Data (+)	blue
4	Data (–)	white
5	Screen	Screen (grey)
6	Notch	

4.2 Mechanical sensor installation

CAUTION!
The sensor will only work correctly when the tip of the probe is completely immersed in liquid. The measuring probe must not be stored dry for more than approx. 10 minutes or protrude from the medium to be measured. Use the transport cap during the installation of the sensor, during maintenance and when transporting, and fill the cap with 3 mol. KCl or pH 4 buffer solution.

CAUTION!
Potential danger with contact with chemical/biological substances. Working with chemical samples, standards and reagents can be dangerous. Make yourself familiar with the necessary safety procedures and the correct handling of the chemicals before use and read and follow all relevant safety data sheets.

Requirements

- Ensure that the sensor does not collide with other instruments or objects in the tank. In this way you will avoid damaging the sensor.
- Fasten the sensor to the nearest wall with a minimum spacing of 0.5 m.

4.2.1 Installation dimensions

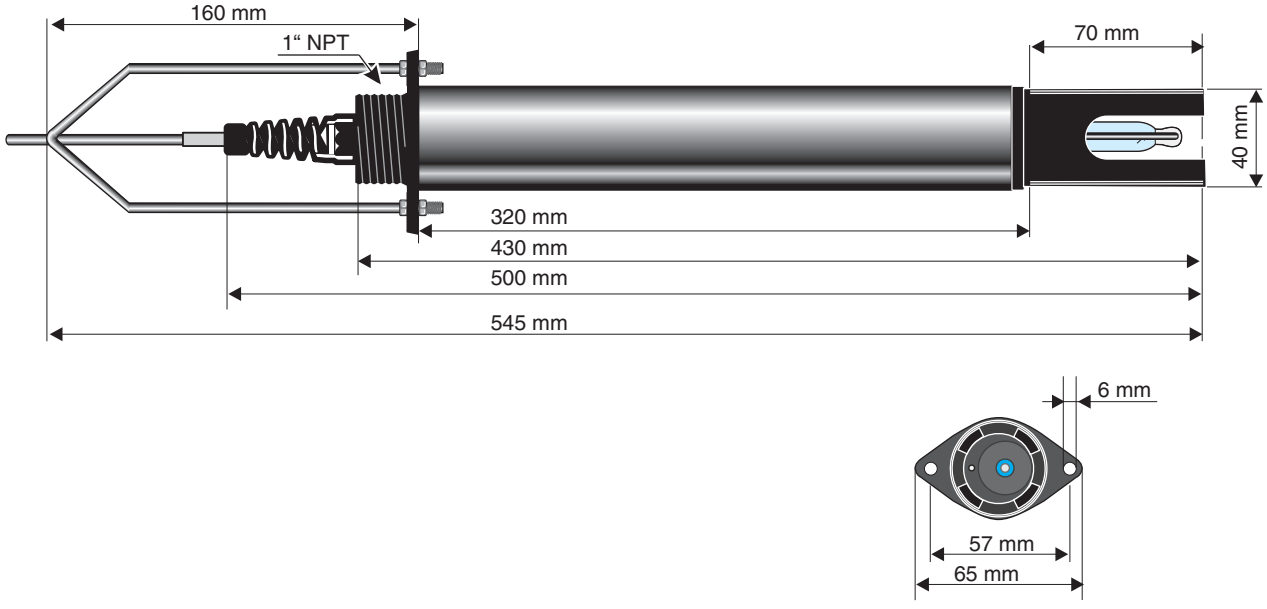

Fig. 3 Installation examples

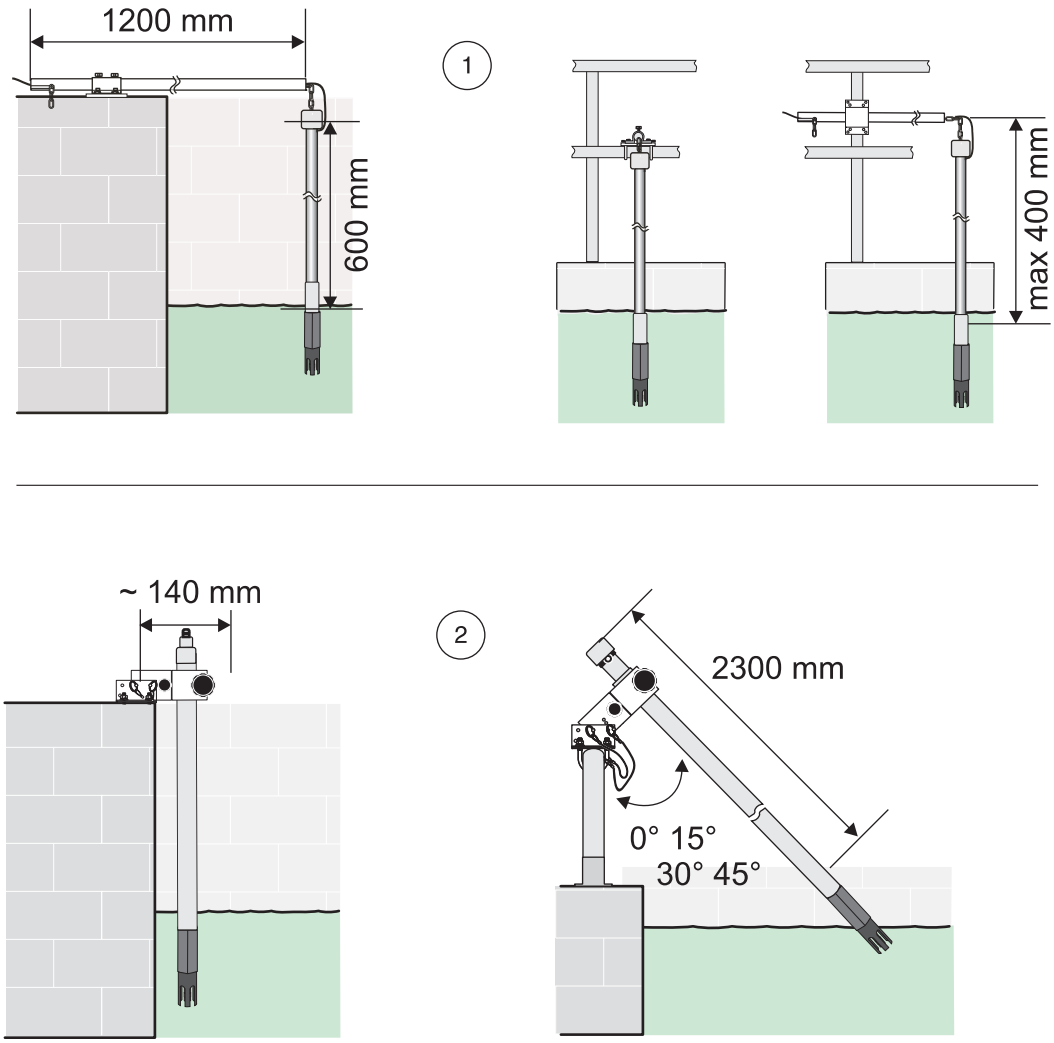

1. Rim mounting chain bracket, PVC or stainless steel	**2.** Rim mounting immersed pipe, PVC or stainless steel

Section 5 Operation

5.1 Operating the sc controller

The sensor can be operated with all sc controllers. Prior to using the sensor, familiarise yourself with the principle of operation of your controller. Learn how to navigate in the menus and run appropriate functions.

5.2 Sensor setup

When you connect the sensor for the first time, the serial number of the sensor is displayed as the sensor name. You can change the sensor name as follows:

1. Open the MAIN MENU.
2. Choose SENSOR SETUP and accept.
3. Choose the related sensor and accept.
4. Choose CONFIGURE and accept.
5. Choose EDIT NAME and accept.
6. Edit the name and accept to return to the SENSOR SETUP menu.

In the same way complete your system configuration using the commands as per table 5.5 The commands under SENSOR SETUP.

5.3 Sensor data logger

A data memory and event memory per sensor are available via the sc controller. While measured data are saved in the data memory at stipulated intervals, the event memory collects numerous events such as configuration changes, alarms and warning conditions. Both the data memory and the event memory can be read out in CSV format. For information on how you can download the data, please see the controller manual.

5.4 The commands under SENSOR DIAG

SENSOR DIAG		
SELECT SENSOR (for several sensors)		
	ERROR LIST	List of all errors that have occurred (see Section 7.1 Error messages)
	WARNING LIST	List of all warnings that have occurred (see Section 7.2 Warnings)

5.5 The commands under SENSOR SETUP

SENSOR SETUP			
SELECT SENSOR (for several sensors)			
CALIBRATE			
	1 POINT BUFFER		Calibration using a buffer — normally pH 7, see 5.6.1 Calibration using a buffer solution.
	2 POINT BUFFER		Calibration using two buffers — normally pH 7 and pH 4 or 10, see 5.6.2 Calibration using two buffer solutions.
	1 POINT SAMPLE		Calibration using a known sample, see 5.6.3 Calibration using a sample solution.
	2 POINT SAMPLE		Calibration using two samples, both with known pH value, see 5.6.4 Calibration using two sample solutions.
	PROCESS TEMP		Set temperature displayed.
	CAL CONFIG		
		OUTPUT MODE	Choose between: ACTIVE, measured value and thus the outputs signals follow the calibration process; HOLD, the last measured value and thus the output signal are frozen; TRANSFER, the measured value and thus the output signal are set to a defined value and CHOICE, after each calibration you can choose one of the three above options.
		CAL REMINDER	You can set when the next calibration is to be performed. The controller then automatically indicates when the next calibration is due.
	DEFAULT SETUP		Return to the factory settings after prompt for confirmation.
CONFIGURE			
	EDIT NAME		Enter a 10-character name and accept.
	SELECT MEASURE		Choose between pH and REDOX.
	TEMP UNITS		Temperature figures in degrees Celsius or Fahrenheit.
	LOG SETUP		
		LOG INTERVAL	Choose between the values available or DISABLED.
		TEMP. INTERVAL	Choose between the values available or DISABLED.
	FILTER		Enter a value.
	DISPLAY FORMAT		Choose the display format.
	SELECT BUFFER		Choose a buffer.
	T-SENSOR		
		AUTOMATIC	
		MANUAL	Enter a value.
	MAINS FREQ.		Enter the mains frequency.
	DEFAULT SETUP		Returns to the factory settings after a prompt for confirmation.
DIAG/TEST			
	PROBE INFO		Provides information on driver, software and serial number
	CAL DATA		Provides information on the offset (T), slope und offset (pH).
	SIGNALS		Provides information on the raw measured data in mV, pH and °C / F
	COUNTERS		Counts up after each calibration and compares the value with the setting made under CAL REMINDER
	TEST/MAINT		Disable OUTPUT during test or maintenance
	SERVICE		Reset Service Counter

5.6 Sensor calibration (pH)

The electrode is calibrated in the factory and is very stable. As a rule, calibration is only necessary after several weeks or after the electrode of the probe is changed. For continued retention of the measuring accuracy and reproducibility, the manufacturer recommends the replacement of the electrode after approx. one year of operation.

Calibrate the sensor

- after the electrode of the probe is changed,
- as required or
- in accordance or agreement with the authorities.

Note: *If you use alkaline buffer solutions, use them quickly. They absorb carbon dioxide from of the air and are therefore relatively unstable.*

The calibration comprises one or two sample or buffer solutions with defined pH value and the comparison of the values displayed with the values for the sample or buffer solution. The calibration is straightforward for the user to perform.

5.6.1 Calibration using a buffer solution

1. Ensure the correct buffers solutions are selected in the SENSOR SETUP=>CONFIGURE=>SELECT BUFFER menu.
2. Remove the sensor from the flow of product and clean it.
3. Place the sensor and the buffer solution at the same temperature.
4. Hold the sensor in the buffer solution for 10 minutes and accept to continue.
5. Accept when the measured value has stabilised.

The sensor detects the buffer solution and makes all the necessary settings automatically.

5.6.2 Calibration using two buffer solutions

The calibration is performed in exactly the same way for the calibration with one buffer solution. In addition, the controller prompts you to:

1. Clean the sensor and hold it in the second buffer solution for 10 minutes.

The sensor detects the buffer solution and makes all the necessary settings automatically.

5.6.3 Calibration using a sample solution

1. Remove the sensor from the flow of product and clean it.
2. Place the sensor and the sample solution at the same temperature.
3. Hold the sensor in the sample solution for 10 minutes and accept to continue.
4. Wait until the measured value has stabilised and enter the pH value for the sample solution. The value for the sample can be determined by a laboratory analysis or a comparative indication.

5.6.4 Calibration using two sample solutions

The calibration is performed in exactly the same way for the calibration with one sample solution. In addition, the controller prompts you to:

1. Clean the sensor and hold it in the second sample solution for 10 minutes.
2. Enter the pH value for the second sample solution.

5.7 Sensor calibration (REDOX)

Calibration using a sample solution is available for calibrating the sensor for Redox.

1. Remove the sensor from the flow of product and clean it.
2. Place the sensor and the sample solution at the same temperature.
3. Hold the sensor in the sample solution for 10 minutes and accept to continue.
4. Wait until the measured value has stabilised and enter the value for the sample solution. The value for the sample can be determined by a laboratory analysis or a comparative indication.

5.8 Sensor calibration (temperature)

To calibrate the temperature sensor, proceed as follows:

1. Ensure that the correct temperature unit is selected in the SENSOR SETUP=>CONFIGURE=>TEMP UNITS menu.
2. Open the SENSOR SETUP => CONFIGURE => T-Sensor menu and choose MANUAL.
3. Immerse the probe for a minimum of 10 min. in a reference solution while monitoring the temperature of the solution with a thermometer (measuring accuracy ± 0.1 °C).
4. Compare the temperature displays on the sensor and the thermometer.
5. Enter the value on the thermometer in the controller.
6. Wait until the value displayed has stabilised and accept.
7. The correction factor is calculated and the temperature values will in future be displayed correctly.

5.8.1 Calibrating two sensors simultaneously

1. Start by calibrating the first sensor and when you arrive at the point at which you are prompted to "PRESS ENTER WHEN STABLE".
2. Press the BACK key.
3. Select LEAVE and press accept. The display returns to the display of the measurements. The measured value for the sensor to be calibrated starts to flash.
4. Start the calibration of the other sensor and when you again arrive at the point at which you are prompted to "PRESS ENTER WHEN STABLE".
5. Press the BACK key.
6. Select EXIT and press accept. The display returns to the display of the measurements. The measured values for both sensors start to flash.
7. To return to the calibration menu for the individual sensors, open the main menu, select SENSOR SETUP and accept. Choose the required sensor and accept.
8. When calibration is complete, accept.

6.1 Maintenance schedule

The following table reflects experience and may, depending on the sector and application, vary significantly from actual requirements.

Maintenance task	90 days	annual
Clean sensor	x	
Check sensor for damage	x	
Renew sensor electrode		x (depending on the application)
Calibration (if necessary)	**If necessary as per agreement with the authorities**	

You can set the calibration interval in the sensor setup. The controller then reminds you when calibration is due.

6.2 Cleaning the sensor

Clean the sensor with a jet of water. If there is still soiling present, use a soft, damp cloth.

6.3 Changing electrode

Change the electrode once a year or if the measurements are excessively inaccurate despite cleaning and calibration.

1. Unscrew the protective cage from the tip of the sensor.
2. Pull out the electrode. If necessary, also lift out the base ring using a screwdriver.
3. Undo the union nut on the connector and replace the electrode.

Fig. 6-1 Changing the electrode

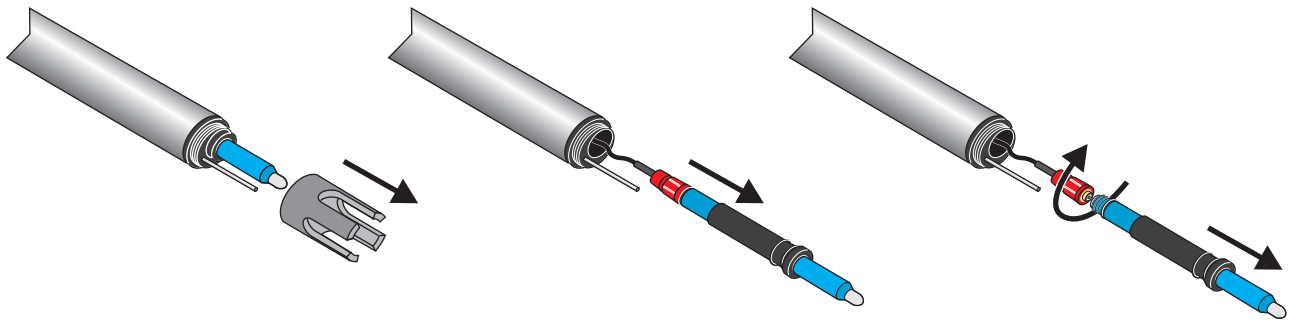

The new electrode is fitted in the reverse order of removal.

1. Slide the new electrode into the sensor until the base ring is in contact with the electrode so that the sensor is sealed.

2. Calibrate the sensor using two buffer solutions (see 5.6.2 Calibration using two buffer solutions).

7.1 Error messages

Possible sensor errors are displayed by the controller.

Table 1: Error messages

Error displayed	Cause	Rectification
*****	No communication with the controller	Check the connection to the controller Check the cable to the controller Check the 12 V power supply
SENSOR MISSING FFFFFFFFFFFFF	No communication with the controller	Check the connection to the controller Check the cable to the controller Check the 12 V power supply
TEMP TOO LOW	Measured temperature < –5 °C	Ensure that the medium temperature is > –5 °C. Check whether the internal resistance of the Pt 100 is approx. 99 Ohm.
TEMP TOO HIGH	Measured temperature > +100 °C	Ensure that the medium temperature is < +100 °C. Check whether the internal resistance of the Pt 100 is approx. 138.5 Ohm.
pH TOO LOW	pH is lower than –2 pH	Check the sensor for leaks. Change the electrode. Change the board.
pH TOO HIGH	pH is higher than +14 pH	Check the sensor for leaks. Change the electrode. Change the board.
mV TOO LOW	mV is lower than –1500 mV	Check the sensor for leaks. Change the electrode. Change the board.
mV TOO HIGH	mV is higher than +1500 mV	Check the sensor for leaks. Change the electrode. Change the board.

7.2 Warnings

Possible warning messages are displayed by the controller.

Table 2: Warnings

Error displayed	Cause	Rectification
CAL TOO OLD	The last calibration was more than x days ago. (Setting from the sensor setup)	Calibrate the sensor. Set the calibration interval in the sensor setup.
HUMIDITY BAG	The desiccant bag is more than 1000 days old.	Please contact service.
REF IMP. LOW	Impedance of Reference electrode too low	Please contact service.
REF IMP. HGH	Impedance of Reference electrode too high	Please contact service.
GLASS IMP. LOW	Impedance of Glass electrode too low	Please contact service.
GLASS IMP. HGH	Impedance of Glass electrode too high	Please contact service.

7.3 Important service data

	Data	Minimum	Maximum
CAL DATA	SLOPE	120 %	80 %
	Offset pH	+ 3 pH	– 3 pH
	Offset ORP	+ 250 mV	– 250 mV
	Temperature offset correction	+ 5 °C	– 5 °C
Counter	Humidity bag	1000 days	
	Operating time		

Digital 1200-S sc pH sensor	LXV426.99.10001
Digital 1200-S sc ORP sensor	LXV426.99.20001
Replacement pH electrode	LZX889
Replacement ORP electrode	LZX890
Replacement electrode protective cage	LZX899
Operating instructions	DOC023.52.03253

Accessories

Cable extension set (0.35 m)	LZX847
Cable extension set (5 m)	LZX848
Cable extension set (10 m)	LZX849
Cable extension set (15 m)	LZX850
Cable extension set (20 m)	LZX851
Cable extension set (30 m)	LZX852
Cable extension set (50 m)	LZX853
Termination box	5867000
Immersed pipe, V4A	LZX914.99.01200
Immersed pipe, PVC	LZX914.99.02200
Chain bracket, V4A	LZX914.99.11200
Chain bracket, PVC	LZX914.99.12200
Immersed pipe set, V4A	LZX914.99.31200
Immersed pipe set, PVC	LZX914.99.32200
U-bolt	LZX959

Reagents and standards

Standard solution	25M1A1025-115
Buffer, pH 7, 500 ml	3A0421
Buffer, pH 4, 500 ml	3A0422
Buffer, pH 10, 500 ml	3A0942
Buffer, pH 7, 4 l	25M1A1016-123
Buffer, pH 4, 4 l	25M1A1014-123
Buffer, pH 10, 4 l	25M1A1017-123
ORP standard solution, 200 mV, 500 ml	25M2A1001-115
ORP standard solution, 600 mV, 500 ml	25M2A1002-115
ORP standard solution, 200 mV, 4 l	25M2A1001-123
ORP standard solution, 600 mV, 4 l	25M2A1002-123

Warranty and liability

HACH LANGE GmbH warrants that the product supplied is free of material and manufacturing defects and undertakes the obligation to repair or replace any defective parts at zero cost.

The warranty period for instruments is 24 months. If a service contract is taken out within 6 months of purchase, the warranty period is extended to 60 months.

With the exclusion of the further claims, the supplier is liable for defects including the lack of assured properties as follows: all those parts that, within the warranty period calculated from the day of the transfer of risk, can be demonstrated to have become unusable or that can only be used with significant limitations due to a situation present prior to the transfer of risk, in particular due to incorrect design, poor materials or inadequate finish will be improved or replaced, at the supplier's discretion. The identification of such defects must be notified to the supplier in writing without delay, however at the latest 7 days after the identification of the fault. If the customer fails to notify the supplier, the product is considered approved despite the defect. Further liability for any direct or indirect damages is not accepted.

If instrument-specific maintenance and servicing work defined by the supplier is to be performed within the warranty period by the customer (maintenance) or by the supplier (servicing) and these requirements are not met, claims for damages due to the failure to comply with the requirements are rendered void.

Any further claims, in particular claims for consequential damages cannot be made.

Consumables and damage caused by improper handling, poor installation or incorrect use are excluded from this clause.

HACH LANGE GmbH process instruments are of proven reliability in many applications and are therefore often used in automatic control loops to provide the most economical possible operation of the related process.

To avoid or limit consequential damage, it is therefore recommended to design the control loop such that a malfunction in an instrument results in an automatic change over to the backup control system; this is the safest operating state for the environment and the process.

HACH Company World Headquarters
P.O. Box 389
Loveland, Colorado
80539-0389 U.S.A.
Tel (800) 227-HACH
(800) -227-4224
(U.S.A. only)
Fax (970) 669-2932
orders@hach.com
www.hach.com

Repair Service in the United States:
HACH Company
Ames Service
100 Dayton Avenue
Ames, Iowa 50010
Tel (800) 227-4224
(U.S.A. only)
Fax (515) 232-3835

Repair Service in Canada:
Hach Sales & Service
Canada Ltd.
1313 Border Street, Unit 34
Winnipeg, Manitoba
R3H 0X4
Tel (800) 665-7635
(Canada only)
Tel (204) 632-5598
Fax (204) 694-5134
canada@hach.com

Repair Service in Latin America, the Caribbean, the Far East, Indian Subcontinent, Africa, Europe, or the Middle East:
Hach Company World Headquarters,
P.O. Box 389
Loveland, Colorado,
80539-0389 U.S.A.
Tel +001 (970) 669-3050
Fax +001 (970) 669-2932
intl@hach.com

HACH LANGE GMBH
Willstätterstraße 11
D-40549 Düsseldorf
Tel. +49 (0)2 11 52 88-320
Fax +49 (0)2 11 52 88-210
info@hach-lange.de
www.hach-lange.de

HACH LANGE LTD
Pacific Way
Salford
GB-Manchester, M50 1DL
Tel. +44 (0)161 872 14 87
Fax +44 (0)161 848 73 24
info@hach-lange.co.uk
www.hach-lange.co.uk

HACH LANGE LTD
Unit 1, Chestnut Road
Western Industrial Estate
IRL-Dublin 12
Tel. +353(0)1 460 2522
Fax +353(0)1 450 9337
info@hach-lange.ie
www.hach-lange.ie

HACH LANGE GMBH
Hütteldorfer Str. 299/Top 6
A-1140 Wien
Tel. +43 (0)1 912 16 92
Fax +43 (0)1 912 16 92-99
info@hach-lange.at
www.hach-lange.at

HACH LANGE GMBH
Rorschacherstrasse 30a
CH-9424 Rheineck
Tel. +41 (0)848 55 66 99
Fax +41 (0)71 886 91 66
info@hach-lange.ch
www.hach-lange.ch

HACH LANGE FRANCE S.A.S.
8, mail Barthélémy Thimonnier
Lognes
F-77437 Marne-La-Vallée
cedex 2
Tél. +33 (0) 820 20 14 14
Fax +33 (0)1 69 67 34 99
info@hach-lange.fr
www.hach-lange.fr

HACH LANGE NV/SA
Motstraat 54
B-2800 Mechelen
Tel. +32 (0)15 42 35 00
Fax +32 (0)15 41 61 20
info@hach-lange.be
www.hach-lange.be

DR. LANGE NEDERLAND B.V.
Laan van Westroijen 2a
NL-4003 AZ Tiel
Tel. +31(0)344 63 11 30
Fax +31(0)344 63 11 50
info@hach-lange.nl
www.hach-lange.nl

HACH LANGE APS
Åkandevej 21
DK-2700 Brønshøj
Tel. +45 36 77 29 11
Fax +45 36 77 49 11
info@hach-lange.dk
www.hach-lange.dk

HACH LANGE AB
Vinthundsvägen 159A
SE-128 62 Sköndal
Tel. +46 (0)8 7 98 05 00
Fax +46 (0)8 7 98 05 30
info@hach-lange.se
www.hach-lange.se

HACH LANGE S.R.L.
Via Rossini, 1/A
I-20020 Lainate (MI)
Tel. +39 02 93 575 400
Fax +39 02 93 575 401
info@hach-lange.it
www.hach-lange.it

HACH LANGE S.L.U.
Edificio Seminario
C/Larrauri, 1C- 2ª Pl.
E-48160 Derio/Vizcaya
Tel. +34 94 657 33 88
Fax +34 94 657 33 97
info@hach-lange.es
www.hach-lange.es

HACH LANGE LDA
Av. do Forte nº8
Fracção M
P-2790-072 Carnaxide
Tel. +351 214 253 420
Fax +351 214 253 429
info@hach-lange.pt
www.hach-lange.pt

HACH LANGE SP. ZO.O.
ul. Krakowska 119
PL-50-428 Wrocław
Tel. +48 801 022 442
Zamówienia: +48 717 177 707
Doradztwo: +48 717 177 777
Fax +48 717 177 778
info@hach-lange.pl
www.hach-lange.pl

HACH LANGE S.R.O.
Zastrčená 1278/8
CZ-141 00 Praha 4 - Chodov
Tel. +420 272 12 45 45
Fax +420 272 12 45 46
info@hach-lange.cz
www.hach-lange.cz

HACH LANGE S.R.O.
Roľnícka 21
SK-831 07 Bratislava – Vajnory
Tel. +421 (0)2 4820 9091
Fax +421 (0)2 4820 9093
info@hach-lange.sk
www.hach-lange.sk

HACH LANGE KFT.
Vöröskereszt utca. 8-10.
H-1222 Budapest XXII. ker.
Tel. +36 1 225 7783
Fax +36 1 225 7784
info@hach-lange.hu
www.hach-lange.hu

HACH LANGE S.R.L.
Str. Căminului nr. 3,
et. 1, ap. 1, Sector 2
RO-021741 Bucureşti
Tel. +40 (0) 21 205 30 03
Fax +40 (0) 21 205 30 17
info@hach-lange.ro
www.hach-lange.ro

HACH LANGE
8, Kr. Sarafov str.
BG-1164 Sofia
Tel. +359 (0)2 963 44 54
Fax +359 (0)2 866 15 26
info@hach-lange.bg
www.hach-lange.bg

HACH LANGE SU ANALİZ SİSTEMLERİ LTD.ŞTİ.
Ilkbahar mah. Galip Erdem
Cad. 616 Sok. No:9
TR-Oran-Çankaya/ANKARA
Tel. +90312 490 83 00
Fax +90312 491 99 03
bilgi@hach-lange.com.tr
www.hach-lange.com.tr

HACH LANGE D.O.O.
Fajfarjeva 15
SI-1230 Domžale
Tel. +386 (0)59 051 000
Fax +386 (0)59 051 010
info@hach-lange.si
www.hach-lange.si

HACH LANGE Ε.Π.Ε.
Αυλίδος 27
GR-115 27 Αθήνα
Τηλ. +30 210 7777038
Fax +30 210 7777976
info@hach-lange.gr
www.hach-lange.gr

HACH LANGE D.O.O.
Ivana Severa bb
HR-42 000 Varaždin
Tel. +385 (0) 42 305 086
Fax +385 (0) 42 305 087
info@hach-lange.hr
www.hach-lange.hr

HACH LANGE MAROC SARLAU
Villa 14 – Rue 2 Casa Plaisance
Quartier Racine Extension
MA-Casablanca 20000
Tél. +212 (0)522 97 95 75
Fax +212 (0)522 36 89 34
info-maroc@hach-lange.com
www.hach-lange.ma

HACH LANGE OOO
Finlyandsky prospekt, 4A
Business Zentrum “Petrovsky fort”, R.803
RU-194044, Sankt-Petersburg
Tel. +7 (812) 458 56 00
Fax. +7 (812) 458 56 00
info.russia@hach-lange.com
www.hach-lange.com

Table 3 Sensor ModBUS Registers

Tag Name	Register #	Data Type	Length	R/W	Description
pH measurement	40001	Float	2	R	pH measurement
ORP measurement	40003	Float	2	R	ORP measurement
Temperature measurement	40005	Float	2	R	Temperature measurement
Raw pH measurement	40007	Float	2	R	Raw pH measurement
mV Raw measurement	40009	Float	2	R	mV Raw measurement
Raw Temperature measurement	40011	Float	2	R	Raw Temperature measurement
Main Measurement Parameter	40013	Integer	1	R	Main Measurement Tag
Temperature Measurement Param.	40014	Integer	1	R	Temp Measurement Tag
Sensor Name[0]	40015	Integer	1	R/W	Sensor Name[0]
Sensor Name[1]	40016	Integer	1	R/W	Sensor Name[1]
Sensor Name[2]	40017	Integer	1	R/W	Sensor Name[2]
Sensor Name[3]	40018	Integer	1	R/W	Sensor Name[3]
Sensor Name[4]	40019	Integer	1	R/W	Sensor Name[4]
Sensor Name[5]	40020	Integer	1	R/W	Sensor Name[5]
Function code	40021	Integer	1		Function code
Next Step	40022	Integer	1		Next Step
Password	40023	Pass	1	R/W	Password
Serial Number[0]	40024	Integer	1	R/W	Serial Number[0]
Serial Number[1]	40025	Integer	1	R/W	Serial Number[1]
Serial Number[2]	40026	Integer	1	R/W	Serial Number[2]
pH/ORP toogle	40027	Bit	1	R/W	pH/ORP toogle
Temperature unit toogle	40028	Bit	1	R/W	Temperature unit toogle
pH display format	40029	Bit	1	R/W	pH display format XX.X or XX.XX
Buffer Type	40030	Bit	1	R/W	Buffer type
---	40031	Integer	1	R/W	Internal use
---	40032	Integer	1	R/W	Internal use
Averaging	40033	Integer	1	R/W	Averaging
Automatic/Manual toogle	40034	Bit	1	R/W	Automatic/Manual toogle
Manual Temperature unit	40035	Integer	1	R/W	Manual Temperature unit
Manual Temperature	40036	Float	2	R/W	Manual Temperature
50/60 Hz toogle	40038	Bit	1	R/W	50/60 Hz toogle
Output Mode	40039	Integer	1	R	Internal use
---	40040	Integer	1	R	Internal use
---	40041	Integer	1	R	Internal use
---	40042	Integer	1	R	Internal use
---	40043	Integer	1	R	Internal use
---	40044	Integer	1	R	Internal use
---	40045	Integer	1	R	Internal use
---	40046	Integer	1	R	Internal use
---	40047	Integer	1	R	Internal use
---	40048	Integer	1	R	Internal use
---	40049	Float	2	R	Internal use

Table 3 Sensor ModBUS Registers

Tag Name	Register #	Data Type	Length	R/W	Description
---	40051	Float	2	R	Internal use
---	40053	Float	2	R	Internal use
Temperature Offset	40055	Float	2	R	Internal use
Temperature Offset unit	40057	Integer	1	R	Internal use
pH Buffer 1 Measurement	40058	Float	2	R	Internal use
pH Buffer 2 Measurement	40060	Float	2	R	Internal use
ORP Buffer 1 Measurement	40062	Float	2	R	Internal use
Output Mode	40064	Integer	1	R	Internal use
Software version	40065	Float	2	R	Software version
Serial Number String[0]	40067	Integer	1	R/W	Internal use
Serial Number String[2]	40068	Integer	1	R/W	Internal use
Serial Number String[4]	40069	Integer	1	R/W	Internal use
Serial Number String[6]	40070	Integer	1	R/W	Internal use
Serial Number String[8]	40071	Integer	1	R/W	Internal use
Serial Number String[10]	40072	Integer	1	R/W	Internal use
---	40073	Integer	1	R	Internal use
---	40074	Integer	1	R	Internal use
pH Offset	40075	Float	2	R	pH Calibration Offset
pH Slope	40077	Float	2	R	pH Calibration slope
ORP Offset	40079	Float	2	R	ORP Calibration Offset
ORP Slope	40081	Float	2	R	ORP Calibrtion slope
Calibration Return Status	40083	Integer	1	R	Calibration Return Status
Time from last Calibration	40084	Integer	1	R	Delay the isnstrument has been calibrated last time
Time from start up	40085	Integer	1	R	Time the system is running
Time to exchange Humidity bag	40086	Integer	1	R	Time the humidity bag has been used
DriverVersion_float	40087	Float	2	R	Driver version
---	40089	Float	2	R	Internal use
Measurement Logging Interval	40091	Integer	1	R/W	Sensor Data logging interval
Temperature Logging Interval	40092	Integer	1	R/W	Temperature logging interval
Electrode Impedance Meas. Interval	40093	Integer	1	R/W	Impedance measurement interval
Glass Impedance Measurement	40094	Float	2	R	Glass impedance measurement
Reference Impedance Measurement	40096	Float	2	R	Reference impedance measurement