Fairview Microwave
RF COMPONENTS ON DEMAND. Done!

SA3N10W-03
DATA SHEET

3 dB Fixed Attenuator N Male To N Female Up To 3 GHz Rated To 10 Watts With Black Aluminum Heatsink Body

Fairview Microwave carries a broad selection of fixed attenuators with a wide range of attenuation levels, frequency ranges, and power dissipation ranges. Also known as RF pads, RF microwave attenuators lower the amplitude of a signal (or attenuate) a known amount. These attenuator pads can be used in a wide variety of applications including reducing a signal level to protect measurement equipment or other circuitry, extending the range of power meters and amplifiers, and impedance matching circuits by reducing the VSWR seen by adjacent components. RF attenuators can prevent signal overload in amplifiers, receivers and detectors, adjusting the signal level to a range that is optimal.

Few RF components are as commonly used as fixed coaxial attenuators, and Fairview Microwave carries one of the largest in-stock selections and ships them same day. The SA3N10W-03 is a 3 dB Fixed Attenuator that operates from DC to 3 GHz and is rated to 10 Watts. The versatile coaxial package uses N male to N female connectors and is also REACH and RoHS compliant. The Black Anodized Aluminum Heatsink body allows for efficient heat dissipation under high power usage conditions.

Features:

- Bidirectional
- DC to 3 GHz Frequency Range
- Attenuation 3±0.4 dB
- Max Power 10 Watts (CW)
- VSWR < 1.2:1

Applications:

- Instrumentation
- Precision Measurements
- Prototyping and Characterization
- Production Systems

Electrical Specifications

Description	Min	Typ	Max	Units
Frequency Range	DC		3	GHz
Impedance		50		Ohms
Nominal Attenuation		3		dB
Attenuation Accuracy		±0.4		dB
VSWR			1.2:1	
Passive Intermodulation			-100	dBc
Input Power, CW derated linearly to 1W @125°C			10	Watts
Input Power, Peak 5µs pulse, 1.25% duty cycle			1	KWatts

Electrical Specification Notes:
Passive intermodulation specified at 910 MHz with two input signals at 935MHz and 960MHz with average carrier power levels of +33dBm each.

Mechanical Specifications

Size

Length	3.27 in [83.06 mm]
Width/Diameter	1.5 in [38.1 mm]
Weight	0.265 lbs [120.2 g]
Body Material and Plating	Black Anodized Aluminum Heatsink

Configuration

Design	Fixed, Bidirectional
Package Style	Connectorized

Fairview Microwave
1130 Junction Dr. #100
Allen, TX 75013
Tel: 1-800-715-4396 / (972) 649-6678
Fax: (972) 649-6689
www.fairviewmicrowave.com
sales@fairviewmicrowave.com

Copyright © 2016

Connectors

Description	Connector 1	Connector 2
Type	N Male	N Female
Connection Method	Standard	Standard
Polarity	Standard	Standard
Contact Material & Plating	Brass, Gold	Beryllium Copper, Gold
Outer Conductor Material & Plating	Brass, Nickel	Brass, Nickel
Body Material & Plating	Brass, Nickel	Brass, Nickel

Environmental Specifications

Temperature

Operating Range -55 to +125 deg C

Compliance Certifications (visit www.FairviewMicrowave.com for current document)

RoHS Compliant Yes
REACH Compliant 12/17/2015

Plotted and Other Data

Notes:

Typical Performance Data

Typical performance of SA3N10W series' 20dB model

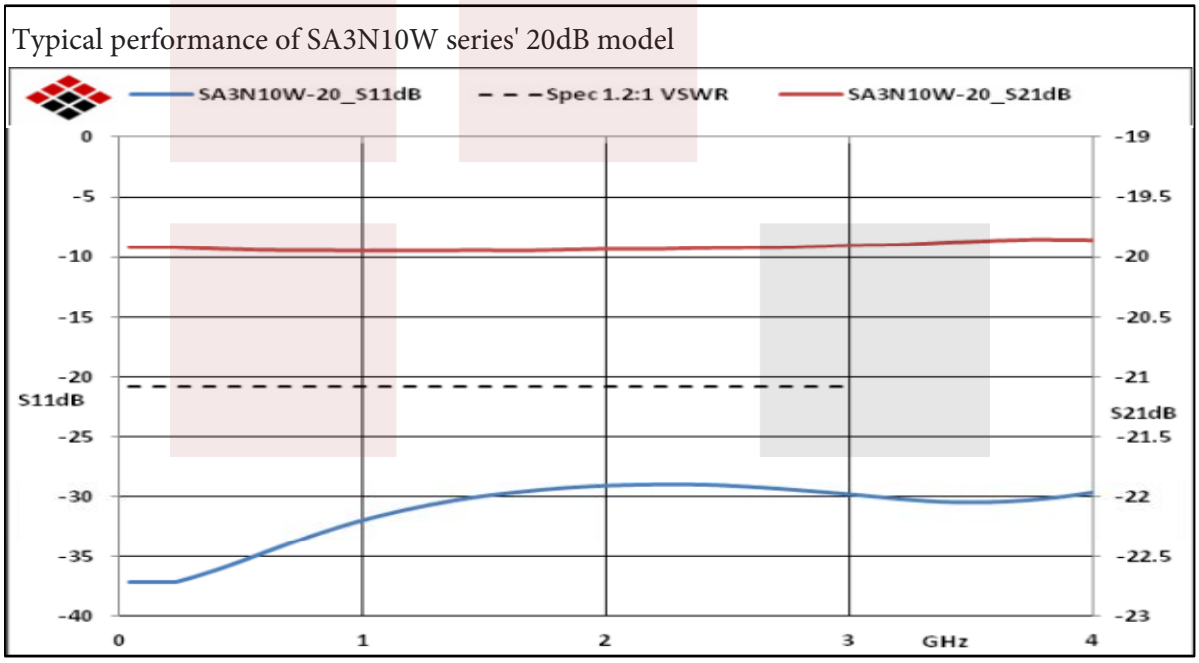

Copyright © 2016

3 dB Fixed Attenuator N Male To N Female Up To 3 GHz Rated To 10 Watts With Black Aluminum Heatsink Body from Fairview Microwave is in-stock and available to ship same-day. All of our RF/microwave products are available off-the-shelf from our ISO 9001:2008 certified facilities in Allen, Texas. Fairview Microwave is RF on-demand.

For additional information on this product, please click the following link: 3 dB Fixed Attenuator N Male To N Female Up To 3 GHz Rated To 10 Watts With Black Aluminum Heatsink Body SA3N10W-03

URL: http://www.fairviewmicrowave.com/3db-fixed-attenuator-n-male-n-female-10-watts-sa3n10w-03-p.aspx

The information contained in this document is accurate to the best of our knowledge and representative of the part described herein. It may be necessary to make modifications to the part and/or the documentation of the part, in order to implement improvements. Fairview Microwave reserves the right to make such changes as required. Unless otherwise stated, all specifications are nominal. Fairview Microwave does not make any representation or warranty regarding the suitability of the part described herein for any particular purpose, and Fairview Microwave does not assume any liability arising out of the use of any part or documentation.

Copyright © 2016

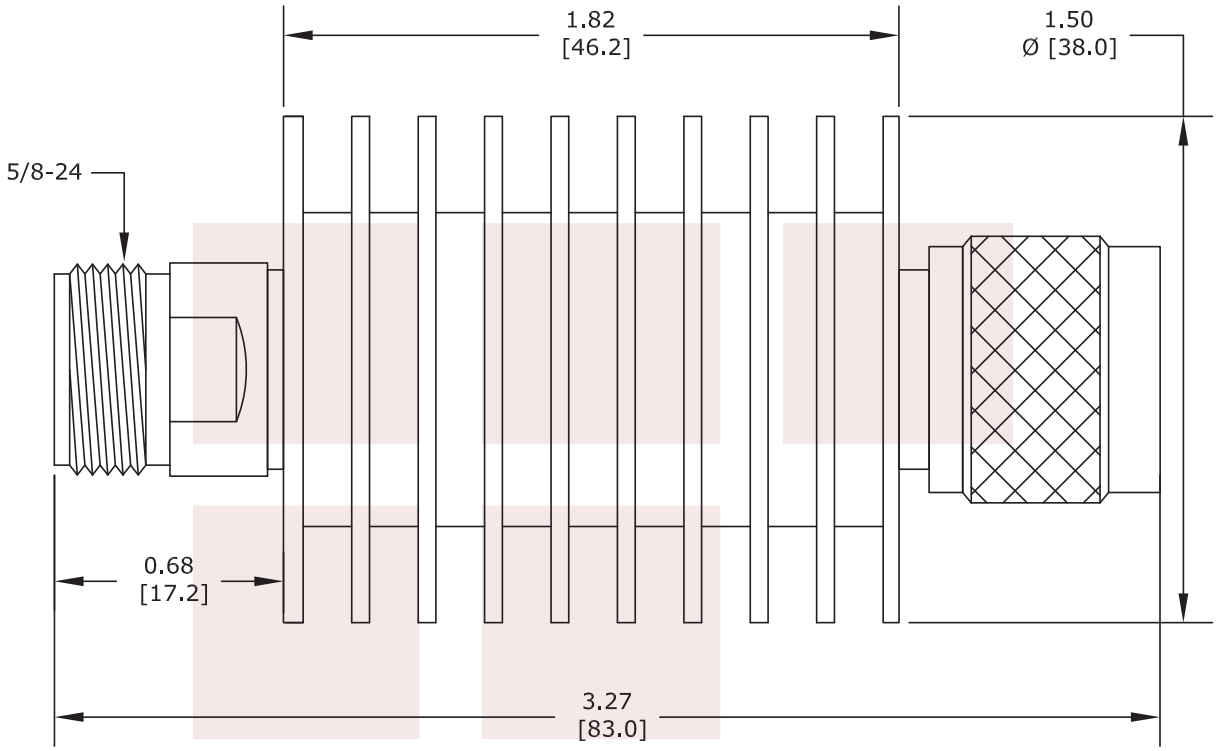

P/N	ATTEN.
SA3N10W-01	1 dB
SA3N10W-02	2 dB
SA3N10W-03	3 dB
SA3N10W-06	6 dB
SA3N10W-10	10 dB
SA3N10W-15	15 dB
SA3N10W-20	20 dB
SA3N10W-30	30 dB
SA3N10W-40	40 dB

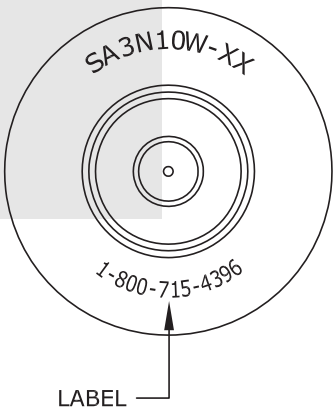

STANDARD TOLERANCES
DIMENSIONS IN INCHES
AND TOLERANCE
±0.08%

*STANDARD TOLERANCES APPLY ONLY TO DIMENSIONS IN INCHES

FAIRVIEW MICROWAVE INC. ALLEN, TX 75013 WWW.FAIRVIEWMICROWAVE.COM	NOTES: 1. UNLESS OTHERWISE SPECIFIED ALL DIMENSIONS ARE NOMINAL. 2. ALL SPECIFICATIONS ARE SUBJECT TO CHANGE WITHOUT NOTICE AT ANY TIME. 3. DIMENSIONS ARE IN INCHES [mm].
TITLE 3 dB Fixed Attenuator N Male To N Female Up To 3 GHz Rated To 10 Watts With Black Aluminum Heatsink Body	DWG NO SA3N10W CAGE CODE 3FKR5 CAD FILE 032216 | SHEET | SCALE N/A | SIZE A | 3045

Copyright © 2016