Paragon

Intelligent Remote Plasma Source 8 SLM, NF_3 Flow

Building on the production-proven attributes of the MKS low-field toroidal plasma source, the Paragon® offers improved data transfer and control to enable the next generation of nano process development and manufacturing.

For cleaning CVD and ALD/ALE process chambers, the Paragon remote plasma source is designed for high gas dissociation rates (> 98%) of NF_3 with gas flows up to 8 slm and pressures up to 10 Torr. This leading-edge performance translates into increased process throughput and repeatable process results. The Paragon design incorporates a proprietary plasma block design with a Plasma Electrolytic Oxidation coating for low particle, long block life that delivers lower cost of ownership.

The Paragon remote plasma source is available with both analog and EtherCAT® communication ports. EtherCAT can be used for direct control of the Paragon, or in combination with the analog port, as a data monitoring port only. The Paragon streams intelligent data sets to the tool or fab database to monitor or modify operating parameters to keep process tools running at peak efficiency and to support diagnostics (APC, FDC) applications.

Product Features

- Best in Class dissociation (>98%) for efficient uniform cleaning results
- EtherCAT intelligent data reporting for faster, tighter device operation to support OEM and fab diagnostics
- Compatible with O_2 and NF_3 mixed gases

Key Benefits

- Up to 8 slm NF flow, in a compact size enables faster clean times
- Proprietary PEO plasma block design offers greater process performance and extended time to maintenance

Specifications	
Gas Supply **Ignition Process**	• 100% Ar for ignition only • Up to 8 slm of NF3 (post ignition NF_3 can be added and the Ar removed)
Ignition and Operating Conditions **During Ignition** **Post Ignition**	• 1 to 8 Torr @ 1 to 5 slm for Ar • 1 to 10 Torr @ 1 to 8 slm
Reactant Output **NF_3 Operation** **O_2: NF3 Mix Operation**	• > 95% dissociation across operating space, 1-10T, 1-8 slm • > 95% dissociation across operating space, 1-10T, 1-8 slm
Duty Cycle	2 sec on time minimum to 100% (process times > 45 minutes)
Wetted Materials	PEO coating, 6061-T6 Aluminum, Chemraz®, Alumina
Control Interface	EtherCAT and analog I/O 25 pin D
Utilities **Power** **Cooling Water**	• 208 VAC, 50/60 Hz, 35A, 3 phase (50A Service recommended) • 2.0 gpm, < 30°C, ambient air 40°C max.
Physical	54 lb. (24.5 Kg); 18.40''L x 9.50''W x 10.50''H (467 x 241 x 267 mm nominal)
Process Gas Feed & Exhaust	Inlet Gas Connection KF40; Outlet Gas Connection KF50
Compliance	CE, SEMI F47, SEMI S2 (includes S8, S10, S14 assessments), UL 61010-1, CAN/CSA-61010-1

Ordering Code Example: AX7710MKS-01	Code	Configuration
Model		
Paragon Remote Plasma Source, 8 Slm NF_3 Flow	P08NFP	P08NFP

Contact your local account representative for pricing, availability, and applications guidance.

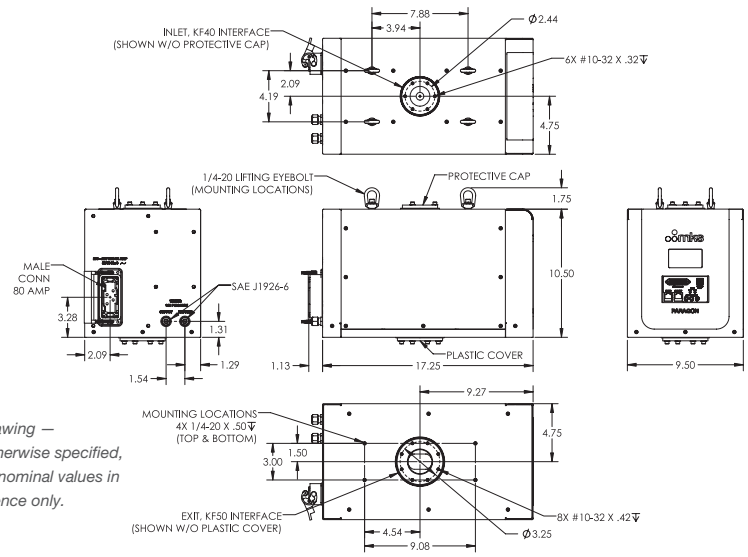

Dimensional Drawing — Note: Unless otherwise specified, dimensions are nominal values in inches for reference only.

www.MKSINST.com