GRYPHON-GQ50L
Handheld Thermal Monocular Camera

HIKMICRO GRYPHON GQ50L handheld thermal monocular camera is equipped with a 640 × 512 infrared detector, a 1920 × 1080 low illumination optical detector and a 1024 × 768 OLED display. It supports functions of observation, Wi-Fi hot spot, hot tracking, bi-spectrum image fusion, laser distance measurement, and so on. The monocular is mainly applied to scenarios such as hunting, hiking and travel, searching and rescuing, etc.

Key Features

- **Thermal**
- 640 × 512 resolution, high sensitivity detector
- 3D DNR
- 50 mm lens
- **Optical**
- Low-light-level detector
- 1920 × 1080 resolution
- **Display**
- 0.39-inch OLED display
- 1024 × 768 resolution
- Thermal, optical and fusion modes
- **Battery**
- One replaceable HIKMICRO battery
- 4.5 hours continuous running with CVBS and Wi-Fi hot spot function off (@25 °C)
- **Function**
- Wi-Fi hot spot
- Built-in EMMC v5.1 Interface with large memory (16 GB), support picture snapshot and video
- Recording
- Digital zoom
- Laser pointer
- Precision laser rangefinder
- Type-C Interface
- Control knob

▪ Specification

Thermal Module	
Image Sensor	VOx Uncooled Focal Plane Arrays
Max. Resolution	640 × 512
Frame Rate	50 Hz
Pixel Interval	12 µm
Response Waveband	8 µm to 14 µm
NETD	<35 mK (@25 °C, F# = 1.2)
Lens (Focal Length)	50 mm
Detection Range	2600 m
Focus Mode	Manual
Field of View	8.78° × 7.03° (H × V)
Min. Focusing Distance	5 m
Aperture	F1.2
Magnification	2.9
Digital Zoom	1 ×, 2 ×, 4 ×, 8 ×
Optical Module	
Image Sensor	1/2” Progressive Scan CMOS
Focal Length	22 mm
Wavelength	400 nm to 1000 nm
Max. Resolution	1920 × 1080
Min. Illumination	0.001 Lux@F1.0
Image Display	
Frame Frequency	50 Hz
Display	0.39 inch, OLED, 1024 × 768
Image Mode	White Hot, Black Hot, Red Hot, Fusion, Visible, Image Fusion
FFC (Flat Field Correction) Mode	Auto, Manual, External Correction
Smart Function	
Hot Spot	Yes
Hot Track	Yes
Distance Measurement	Yes
Standby Mode	Yes
System	
Record Video	Yes
Capture Snapshot	Yes
Built-in Memory	16 GB
Power Supply	
Battery Type	One 18650 battery
Battery Operating Time	4.5 hours
Power	Removable Battery
General	
Protection Level	IP67
Dimension	87.2 mm × 73.3 mm × 183.6 mm
Weight	548 g
Working Temperature	-30 to 55 °C

Eye-Relief	19.5 mm
Laser Rangefinder	
Safety Class for Laser	Class 1
Wavelength	905 nm
Max. Measuring Range	600 m
Measurement Accuracy	±1 m

▪ Available Model

GQ50L

▪ Dimension

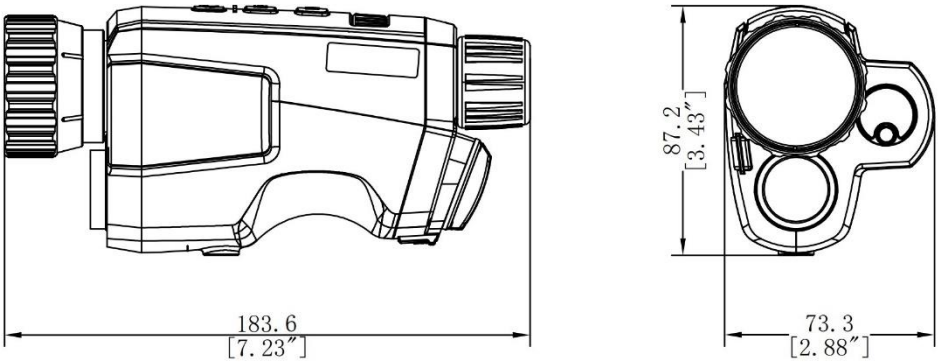

Unit:mm[Inch]

COMPLIANCE NOTICE: The thermal series products might be subject to export controls in various countries or regions, including without limitation, the United States, European Union, United Kingdom and/or other member countries of the Wassenaar Arrangement. Please consult your professional legal or compliance expert or local government authorities for any necessary export license requirements if you intend to transfer, export, re-export the thermal series products between different countries.

Room 313, Unit B, Building 2, 399 Danfeng Road, Xixing Subdistrict,Binjiang District, Hangzhou, Zhejiang

© Hangzhou Microimage Software Co., Ltd. 2020 | Data subject to change without notice!