HORIBA
Scientific

Instruction Manual

Combination type Calcium Ion Selective Electrode
6583S-10C

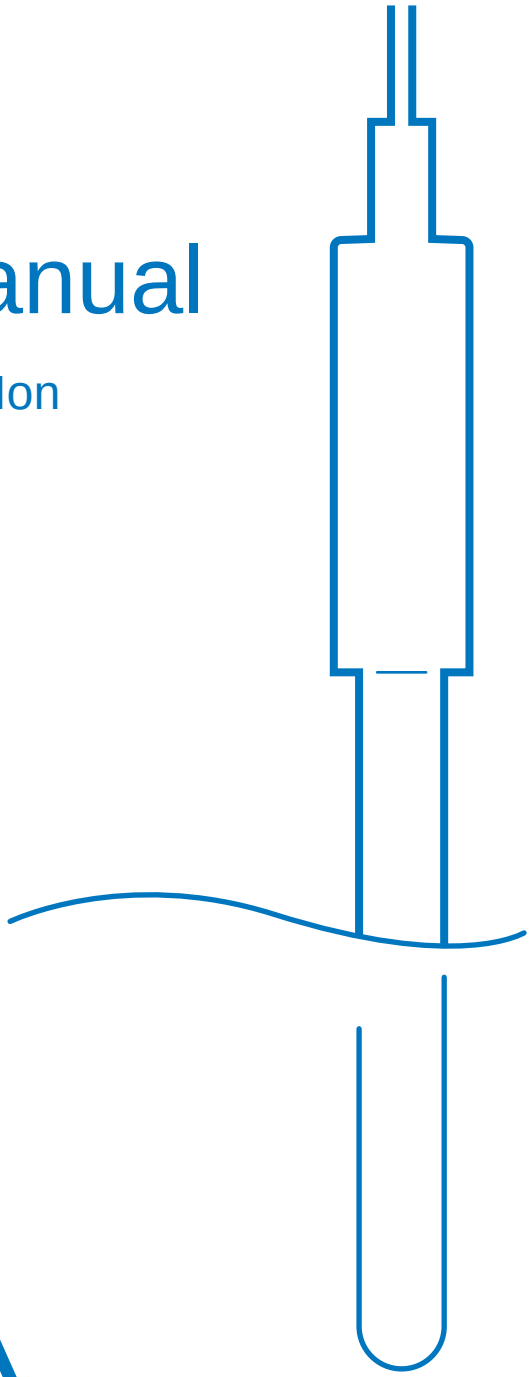

LAQUA
ELECTRODE

Preface

This manual describes operation of the combination type calcium ion selective electrode.
Be sure to read this manual before using the product to ensure proper and safe operation of the product.
Also safely store the manual so it is readily available whenever necessary.
Please contact HORIBA Advanced Techno if any points regarding safety come to your attention during use.
Product specifications and appearance, as well as the contents of this manual are subject to change without notice.

Warranty and responsibility

This product is not covered by warranty because it is a consumable item.
HORIBA Advanced Techno Co., Ltd. SHALL NOT BE LIABLE FOR ANY DAMAGES RESULTING FROM ANY MALFUNCTIONS OF THE PRODUCT, ANY ERASURE OF DATA, OR ANY OTHER USES OF THE PRODUCT.

Trademarks

- QR Code is a trademark of DENSO WAVE INCORPORATED.

Company names and brand names are either registered trademarks or trademarks of the respective companies. (R), (TM) symbols may be omitted in this manual.

Regulations

Conformable standards	Authorised representative in EU
This equipment conforms to the following standards: CE **RoHS:** EN50581 9. Monitoring and control instruments	HORIBA UK Limited 2 Dalston Gardens, Stanmore, Middx HA7 1BQ, UK

CODE:GZ0000452167
April, 2017
© 2017 HORIBA Advanced Techno Co., Ltd.

For your safety

Hazard classification and warning symbols

Warning messages are described in the following manner. Read the messages and follow the instructions carefully.

Hazard classification

⚠ DANGER	This indicates an imminently hazardous situation which, if not avoided, will result in death or serious injury. This is to be limited to the most extreme situations.
⚠ WARNING	This indicates a potentially hazardous situation which, if not avoided, could result in death or serious injury.
⚠ CAUTION	This indicates a potentially hazardous situation which, if not avoided, may result in minor or moderate injury. It may also be used to alert against unsafe practices.

Warning symbols

	Description of what should be done, or what should be followed
	Description of what should never be done, or what is prohibited

◆ Safety precautions

This section provides precautions for using the product safely and correctly and to prevent injury and damage. The terms of DANGER, WARNING, and CAUTION indicate the degree of imminency and hazardous situation. Read the precautions carefully as it contains important safety messages.

⚠ CAUTION	
	Precautions for chemicals Solutions used for calibration and measurement must not come in contact with the skin, or consumed. These solutions stimulate the eyes and skin. If these solutions come in contact with your skin or eyes, flush immediately with running water. If you drink these solutions by accident, immediately seek medical advice. When you handle these solutions, make sure to wear latex gloves, protective glasses, etc.

Product handling information

Operational precautions

Use of the product in a manner not specified by the manufacturer may impair the protection provided by the product. And it may also reduce product performance.
Exercise the following precautions:

- Use the supplied internal solution for the reference electrode. Using any other internal solutions may cause measurement errors.
- If the ion selective membrane is dry, soak the electrode in pure (deionized) water for at least one hour. Using it in a dry state will cause measurement errors.
- Do not get the electrode connector wet or touch it with dirty hands. It may cause a failure.
- Do not touch a hard surface with the electrode. It may cause a failure.
- Only use the product including accessories for their intended purpose. HORIBA Advanced Techno assumes no liability when they are used for any other products.

Disposal of the product

When disposing of the product, follow the related laws and/or regulations of your country.

Manual information

Description in this manual

The following explains the icons used in this manual.

Icon	Meaning
Note	This interprets the necessary points for correct operation and notifies the important points for handling the product.
Tip	This indicates reference information.
	This indicates the part where to refer for information.
View video VIDEO	This indicates that you can access the instruction video on the web page. Access the webpage by using the QR Code.

Original language

This is the English translation of an original Japanese document.

Documents related to this product

The following documents are related to this product.

- **Combination type Calcium Ion Selective Electrode Instruction Manual (this manual)**

  This manual mainly discusses how to operate the combination type calcium ion selective electrode.

- **Meter Instruction Manual**

  This manual mainly discusses how to operate the meter to which the combination type calcium ion selective electrode is connected.

- **Electrode Stand Instruction Manual**

  This manual mainly discusses how to operate the electrode stand which holds the combination type calcium ion selective electrode.

Contents

Before Use 1

Confirmation of the items included in the package 2
About this product 3
Measurement procedure 5

Electrode Preparation 9

Assembling the electrode (only when use for first time) . . 10
Filling with internal solution 12
Rinsing the electrode 15
Connecting the electrode to the meter 16

Calibration 17

Standard solutions 18
Calibration operation 19

Measurement 29

Requirements for sample and standard solutions 30
Measurement hints 31
Measurement units 31
Measurement operation 32

After Measurement 37

How to clean the electrode 38

Maintenance 43

Storage 44
Consumables 45

Troubleshooting 47

When accurate measurement is not possible 48

Reference 53

Ion selective electrodes 54
Measurement principle of ion selective electrode 56
Characteristics of calcium ion selective electrode 60

Material 67

Specifications 68
External dimensions 69
Consumables 70

Figures

Fig. 1 Included items 2
Fig. 2 System configuration. 3
Fig. 3 Names of parts 4
Fig. 4 Structure of combination type ion selective electrode. 54
Fig. 5 State of liquid junction of reference electrode . . 55
Fig. 6 Relationship between monovalent cation concentration (activity) and electrode potential. 57
Fig. 7 Difference in state of solution depending on ion concentration. 58
Fig. 8 Calibration curve of calcium ion selective electrode 60

Tables

Table 1 Ca^{2+} concentration measurement unit conversion table 31
Table 2 Check list 48
Table 3 Electrode types 54
Table 4 (Example) Activity coefficient for monovalent ion concentration 59
Table 5 Relationship between temperature of ion selective electrode and theoretical slope 62
Table 6 Relationship between temperature of calcium ion selective electrode and theoretical slope . . 62
Table 7 Substances that cause a 10% error in the reading, and their concentrations. 64
Table 8 Specifications of combination type calcium ion selective electrode 68
Table 9 Consumables 70

Before Use

This chapter describes what you should know before using the product.

Confirmation of the items included in the package 2

About this product 3

Product features.....3
System configuration 3
Names of parts.....4

Measurement procedure 5

Confirmation of the items included in the package

Open the package and make sure that the following items are included.

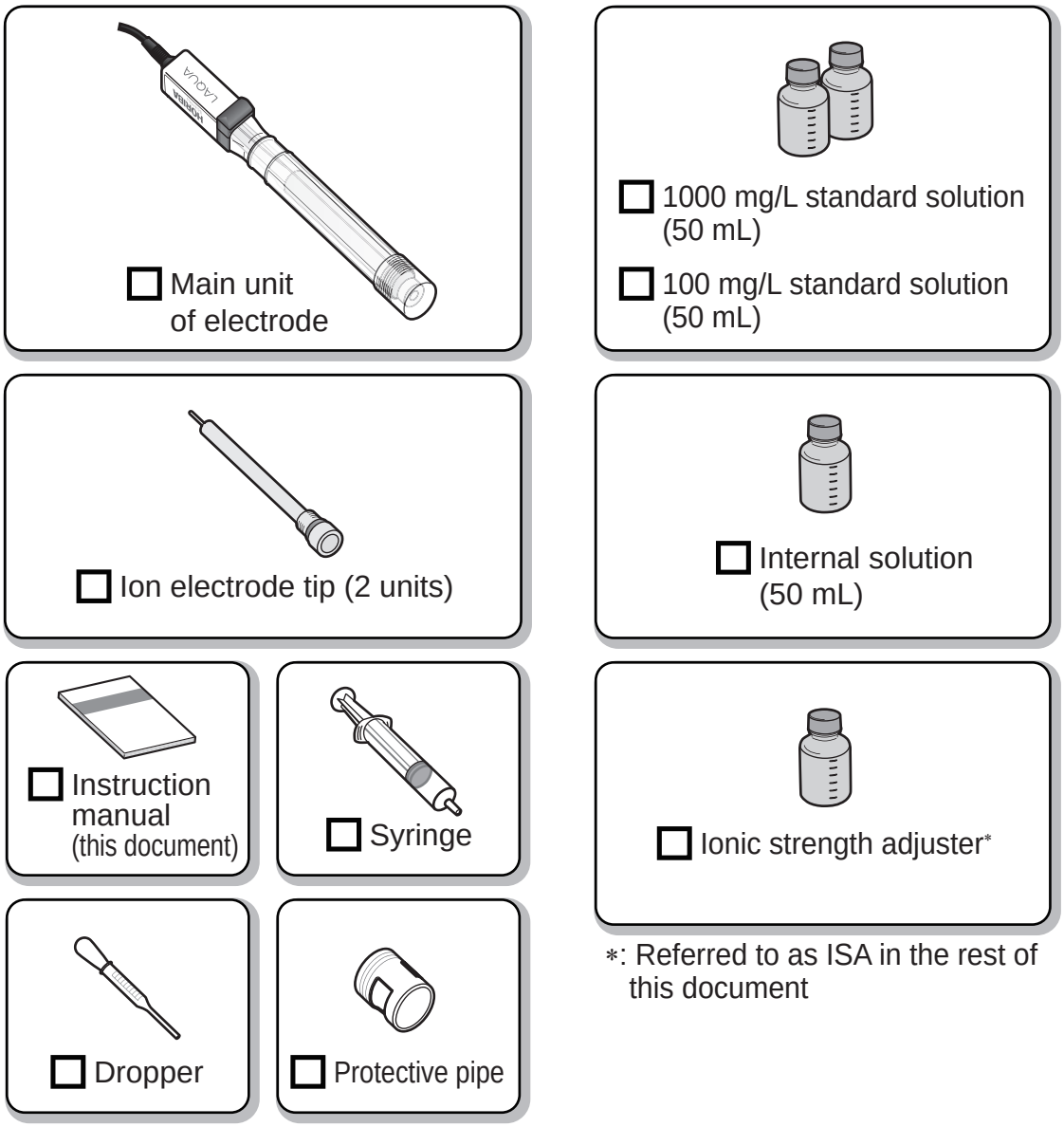

*: Referred to as ISA in the rest of this document

Fig. 1 Included items

This product is a consumable item. For details on purchasing an electrode and reagent, refer to "Consumables" (page 70).

About this product

Product features

The combination type calcium ion selective electrode is an electrode that combines a tip type ion electrode with a reference electrode.
This product has the following features.

- Ion concentration can be measured with this one electrode. There is no need to use a pair of an ion selective electrode and reference electrode.
- The reference electrode part has a double junction structure. This minimizes the contamination of the sample solution by the internal solution outflow, the interference on the electrode potential, and so on.
- Since the structure of the liquid junction, movable sleeve type, is capable of eliminating clogging by contaminants, it is possible to measure the concentration accurately.

System configuration

This product is used with the meter of HORIBA Advanced Techno connected, which is sold separately.
Electrode stand(*) is also available.

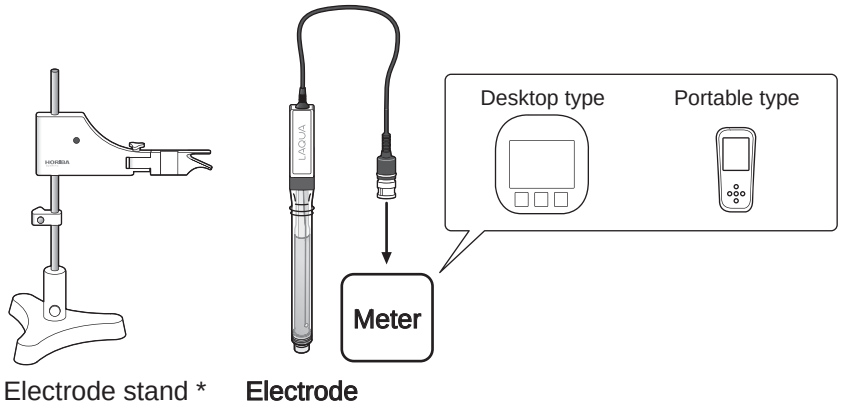

* This stand is optional for the portable meter.

Fig. 2 System configuration

Refer to the meter instruction manual for more details.

Names of parts

This product consists of the parts shown in the figure below.

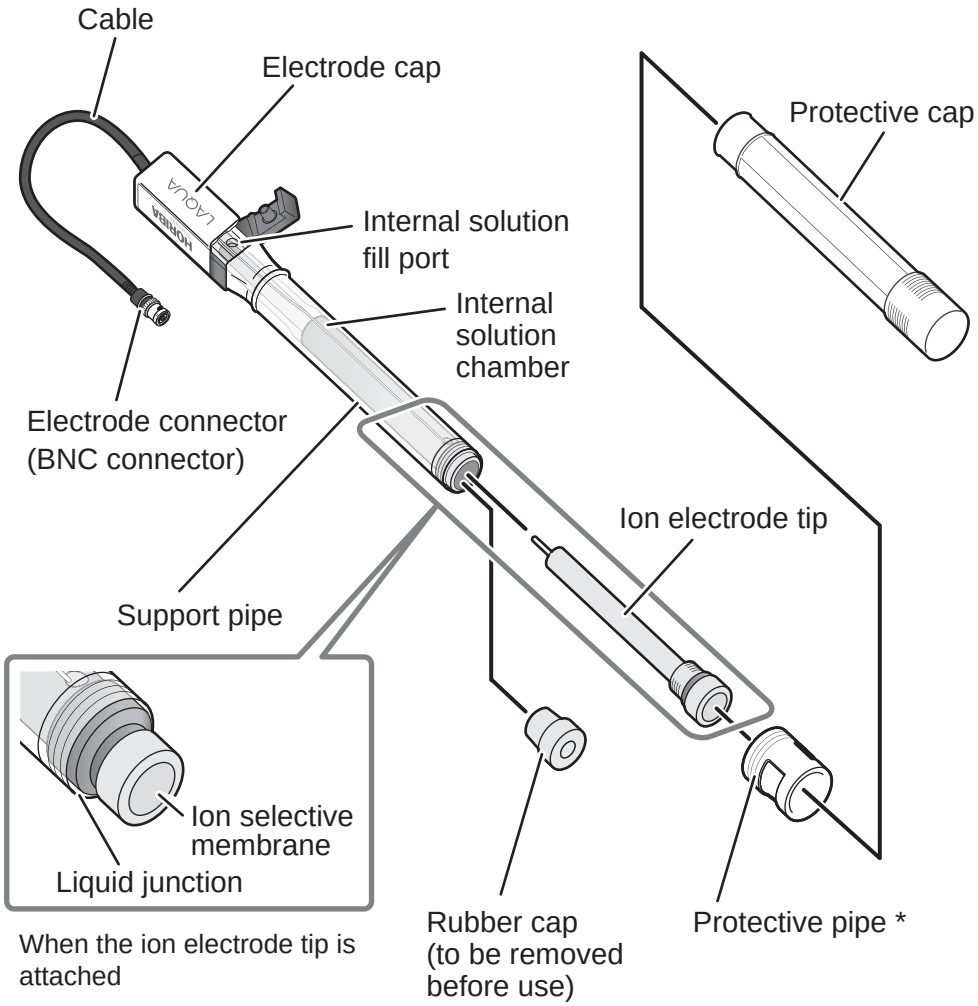

Fig. 3 Names of parts

* Use the protective pipe for protecting the ion electrode tip.
Attaching it for measurements outdoors will protect the ion electrode tip against damage from gravel or other foreign matters.
If there is no risk of damage, it is not required to attach it.

Measurement procedure

The following figure shows the procedure for measuring the Ca^{2+} concentration.

1 Measurement preparation

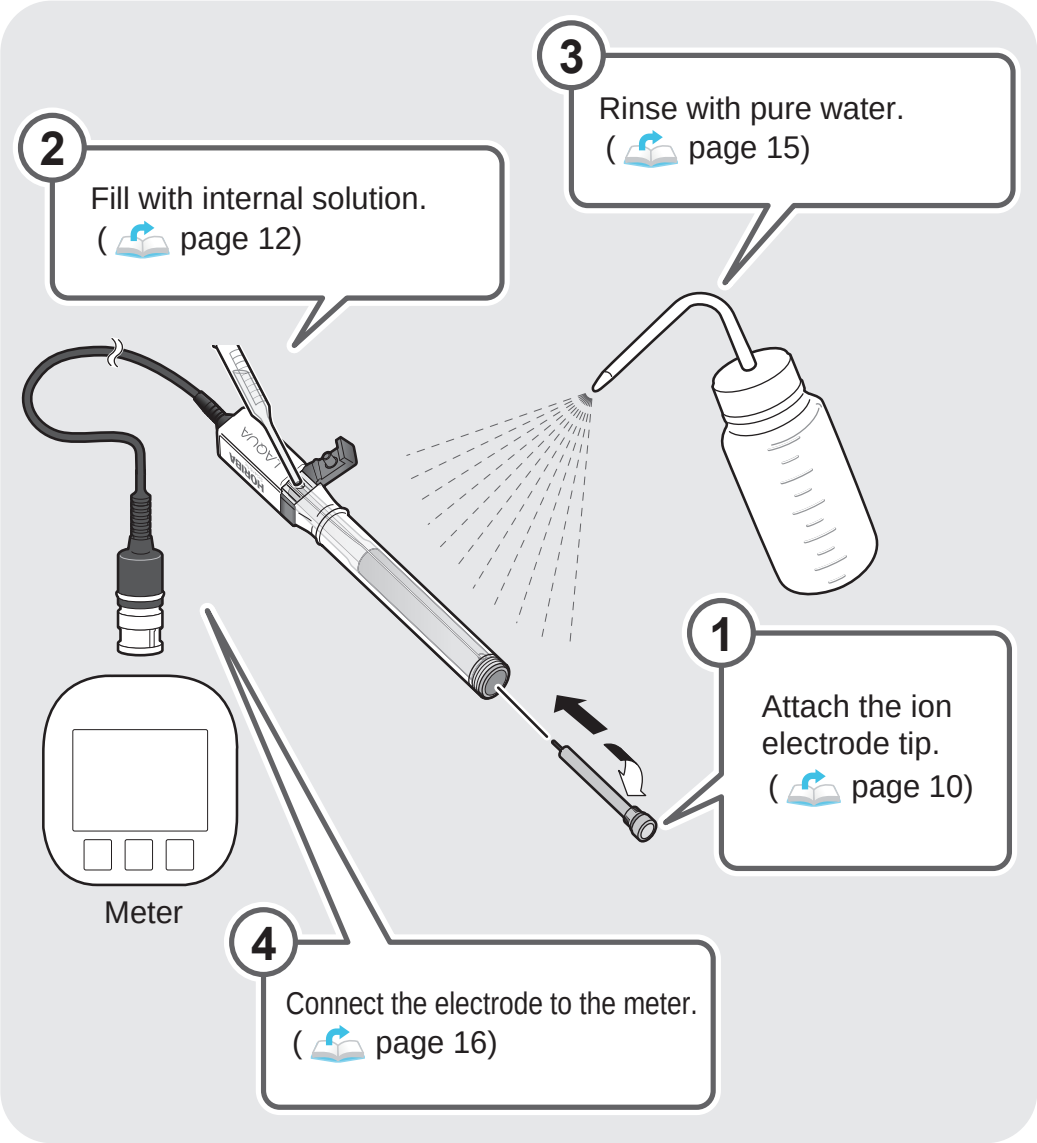

2 Calibration

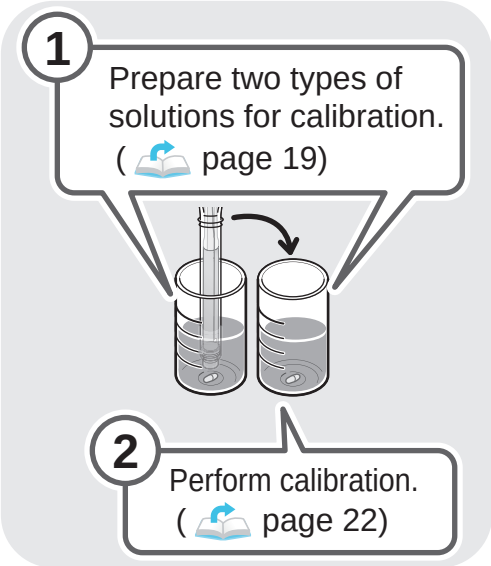

In the following cases, perform conditioning of the electrode before calibration.

- Before the first use
- Before use after storage for two weeks or longer
- If the electrode is less responsive

For details on conditioning, refer to “Conditioning of the electrode” (page 23).

3 Measurement

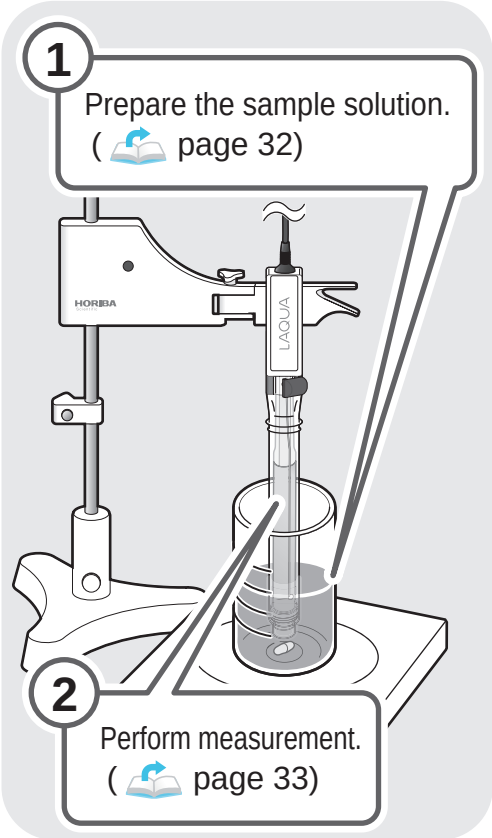

4 After measurement

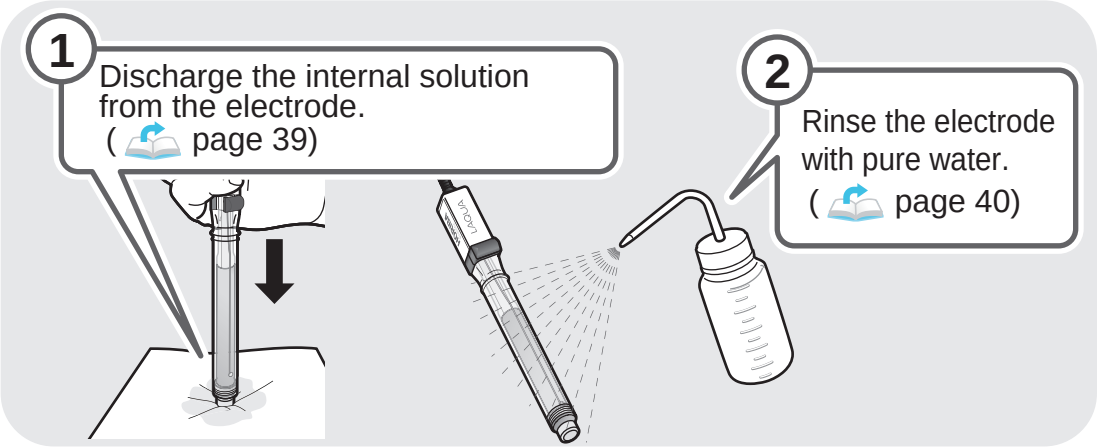

Note

When the electrode will not be used for two weeks or longer, store it as described on page 44.

Memo

Electrode Preparation

This chapter describes the preparation that must be performed before using the product.

Assembling the electrode (only when use for first time)..... 10

Filling with internal solution 12

Rinsing the electrode..... 15

Connecting the electrode to the meter 16

Assembling the electrode (only when use for first time)

When using the product for the first time, assemble the electrode as described in the following procedure.

View video

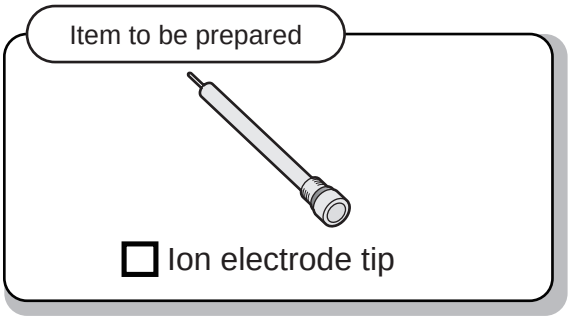

1 Remove the protective cap.

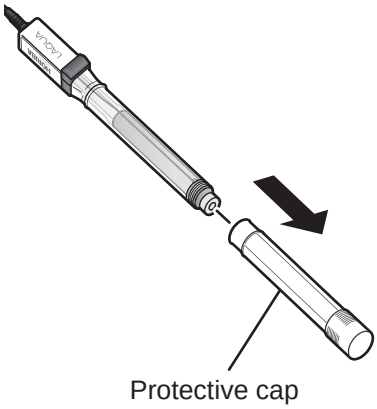

2 Remove the rubber cap.

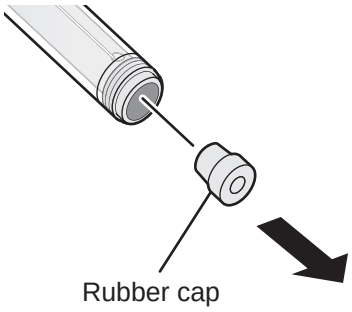

Tip

The rubber cap will not be used again. Dispose of it according to the local rules and regulations.

3 Attach the ion electrode tip by turning it clockwise.

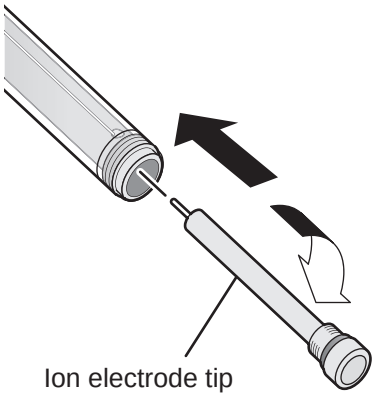

Filling with internal solution

Be sure to fill the electrode with internal solution as described in the following procedure before use.

View video

MOVIE

Note

- **Be sure to fill with internal solution before use.**
  If measurement is performed in the state in which there is not much internal solution, an inflow of sample solution into the electrode will result in accurate measurements no longer being possible.
- **Use the internal solution included in the package or available as a consumable sold separately by HORIBA Advanced Techno.**
  ("Consumables" (page 70))
- **Discharge the internal solution each time measurement finishes.**

Items to be prepared

☐ Internal solution ☐ Dropper

1 **Remove the protective cap.**
(Except when it is already removed, such as first time of use.)

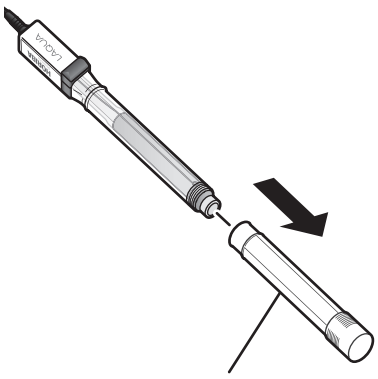

2 Make sure that there is no internal solution remaining.

If there is any internal solution remaining, remove it all.
(Steps 1 to 2 of “How to clean the electrode” (pages 38 to 39.))

3 Open the rubber stopper of the internal solution fill port.

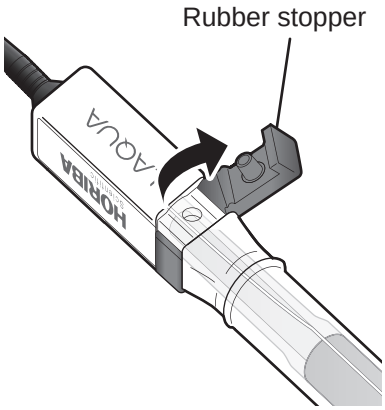

4 Fill the internal solution with a dropper.

Fill until the solution surface comes up to just below the internal solution fill port.

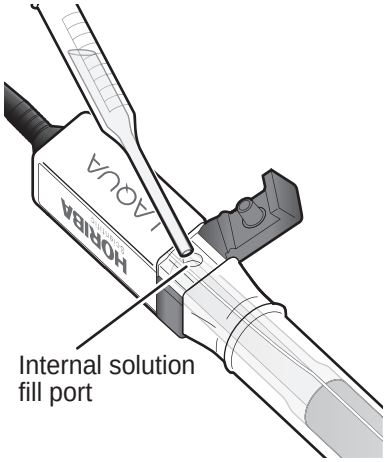

5 Spread soft and clean lint-free paper, or cloth beneath the electrode and then press the electrode against it from above.

Note

When pressing the electrode from above, do not press too hard and do not subject it to an impact.
It may damage the electrode.

6 Make sure that the inside of the electrode moves up and down and that internal solution oozes out from the liquid junction.

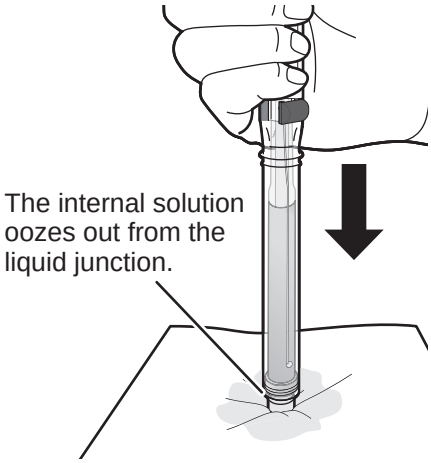

View video

MOVIE

> **Tip**
>
> It is best that the internal solution oozes out slightly. If the outflow is extremely little, the potential of the reference electrode will become unstable and susceptible to stir.
> In such a case, repeat step 5 and 6 until the internal solution oozes out from the liquid junction.

7 Close the rubber stopper of the internal solution fill port.

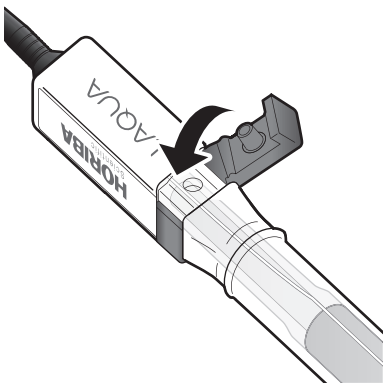

Rinsing the electrode

Make sure that no dirt and other foreign matters have adhered to the electrode before measurement.
If dirt and other foreign matters have adhered to the electrode, rinse the electrode as described in the following procedure.

View video

MOVIE

1 Rinse the electrode with pure water.

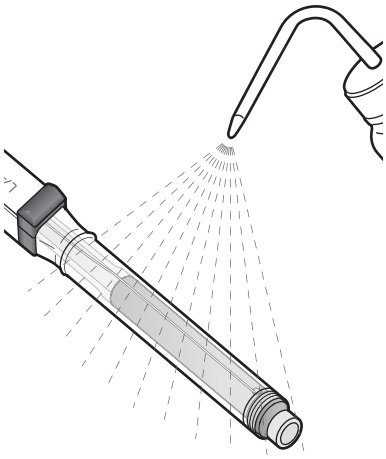

2 Wipe off the moisture.

Wipe off the moisture using soft and clean lint-free paper, or cloth.

3 Make sure that there are no dirt and crystals of internal solution adhered to the area around the liquid junction.

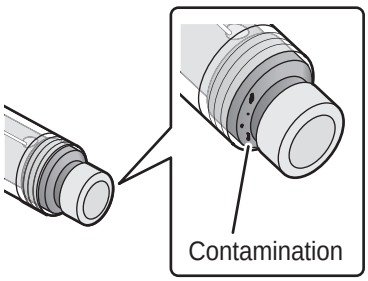

Note

If dirt and crystals of internal solution are adhered, they may affect the outflow of internal solution. Rinse the electrode with pure water again.

Connecting the electrode to the meter

Connect the electrode to the meter.
For details on the connector of the meter to which the electrode will be connected, refer to the instruction manual of the meter.

View video

1 Connect the electrode connector to the meter.

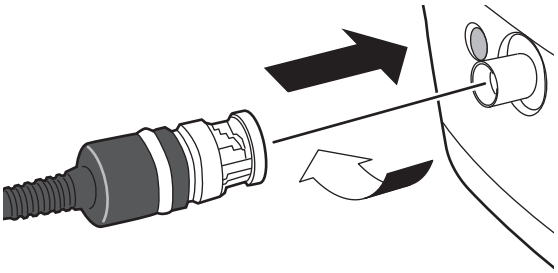

Tip

When disconnecting the electrode from the meter, disconnect it in the opposite direction from step 1.

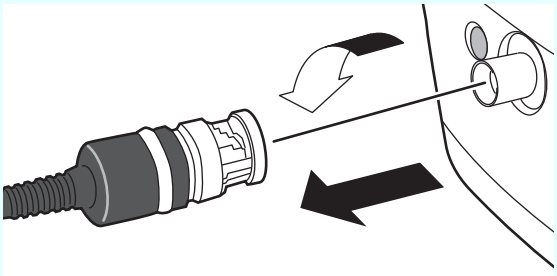

Calibration

This chapter describes calibration.

Standard solutions 18

Calibration operation 19

Standard solutions

The following standard solutions are used for calibration and measurement.

- **1000 mg/L Ca^{2+} standard solution**
  Use the standard solution included in the package or available as consumables by HORIBA Advanced Techno.

- **100 mg/L Ca^{2+} standard solution**
  Use the standard solution included in the package or available as consumables by HORIBA Advanced Techno.

- **10 mg/L Ca^{2+} standard solution**
  Prepare this by pouring 50 mL of the 100 mg/L Ca^{2+} standard solution into a 500 mL volumetric flask and filling up to 500 mL with pure water.

Calibration operation

Measure standard solutions in ascending order of ion concentration to create calibration curves in the meter (“Measurement principle of ion selective electrode” (page 56)).
Perform calibration once every day or before measurement as appropriate.

Note

Before operation

- **Be sure to fill with internal solution and rinse the electrode before the calibration operation. (“Filling with internal solution” (page 12), “Rinsing the electrode” (page 15))**
- **Perform conditioning before the first use, before use after storage for two weeks or longer, or if the electrode is less responsive. (Note on page 23)**

Items to be prepared

☐ Standard solutions

☐ ISA (50 mL)

☐ Syringe

Note

- **Prepare at least two types of standard solution with different concentrations.**
- **Always use new standard solution for calibration.**
- **After the standard solutions (50 mL) and ISA (50 mL) included in the package are used up, use the standard solution (500 mL) and ISA (500 mL) available as consumables.**

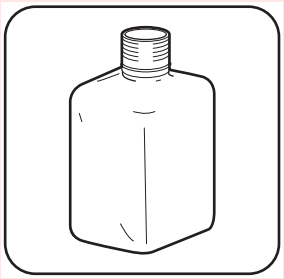

1 Set the meter as shown below.

Set the valence as shown in the table on the right.

Setting item	Setting value
Valence	+2

2 Prepare the standard solutions.

Prepare the two types of standard solution to create Ca^{2+} concentration ratio 1:10.
For example, if the sample solution concentration is 250 mg/L, prepare standard solutions of 100 mg/L and 1000 mg/L. This case is used as an example in the following steps.

Note

Always use new standard solution for calibration.

3 Prepare the first solution for calibration.

(1) Put 50 mL of 100 mg/L standard solution into a 100 mL beaker.

(2) Add 1 mL of ISA.

(3) Stir the solution slowly with a magnetic stirrer.

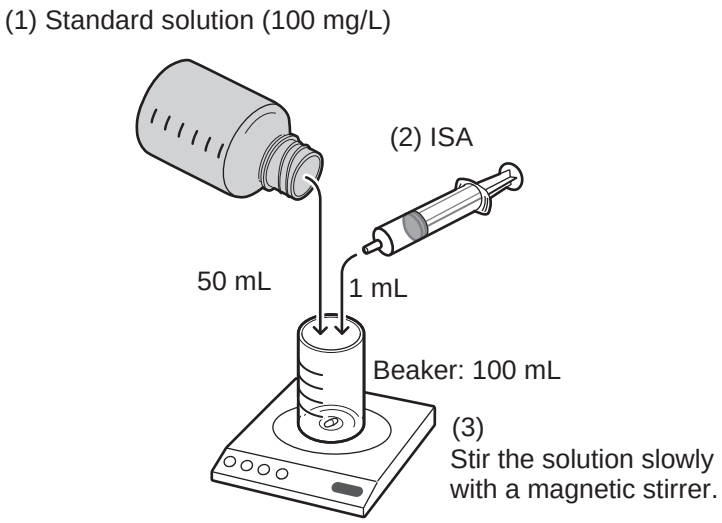

Note

It is best to control the stirring speed so that the stir bar will rotate 3 or 4 turns per second.
If swirling occurs on the surface, the stirring speed is too fast. Reduce the speed to a level where swirling does not occur.

Note

Additive amount of ISA
("About activity" (page 58))

In the case using different volume from the example, note that the volume ratio shall be the standard solution:the ISA = 50:1.

4 Prepare the second solution for calibration.

(1) Put 50 mL of 1000 mg/L standard solution into a 100 mL beaker.

(2) Add 1 mL of ISA.

(3) Stir the solution slowly with a magnetic stirrer.

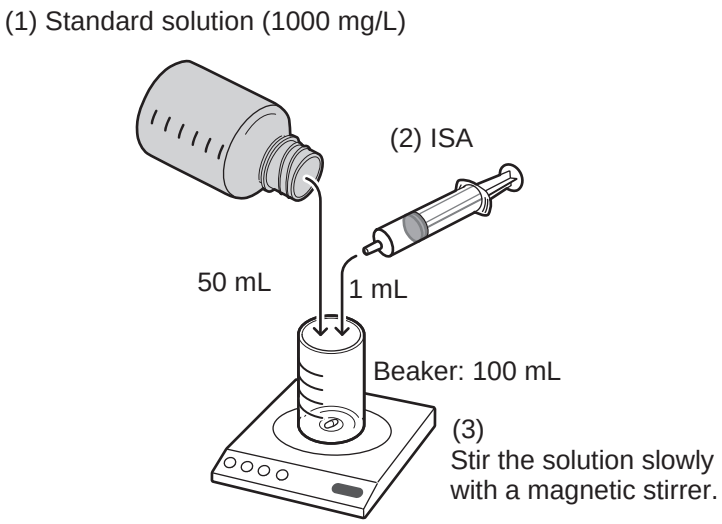

5 Rinse the electrode with pure water.

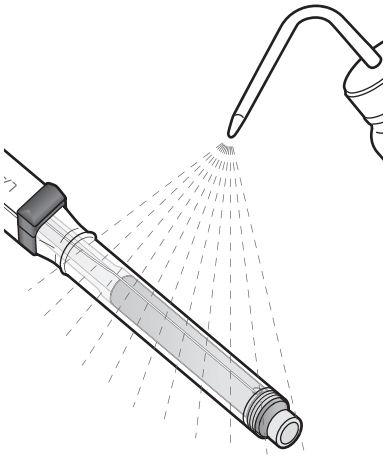

6 Wipe off the moisture.

Wipe off the moisture using soft and clean lint-free paper, or cloth.

7 Open the rubber stopper of the internal solution fill port.

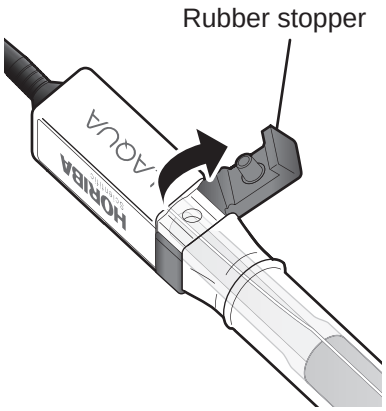

Note

Conditioning of the electrode

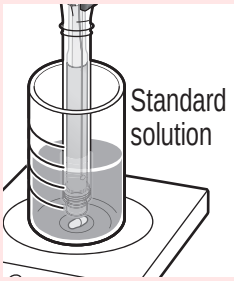

In the following cases, perform conditioning of the electrode before calibration.

- **Before the first use**
- **Before use after storage for two weeks or longer**
- **If the electrode is less responsive**

An electrode is conditioned by soaking it in a standard solution for 1 hour or longer.
Use a standard solution whose concentration is 100 mg/L or more.
A standard solution with ISA added can also be used.

8 Soak the electrode in the first solution for calibration prepared in step 3.

Place the electrode fully into the solution for calibration so that the solution comes up to the liquid junction.

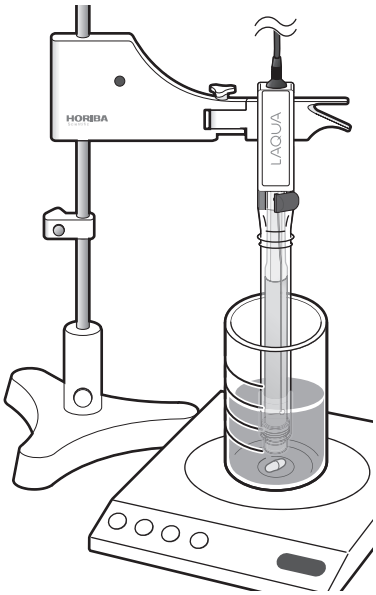

Note

- **Do not touch the stir bar with the electrode. It may damage the electrode.**
- **Make sure that the rubber stopper of the internal solution fill port is open during calibration.**
  If it is closed, the internal solution does not ooze out very much from the liquid junction.
  As a result, the potential of the reference electrode will become unstable and susceptible to stir.

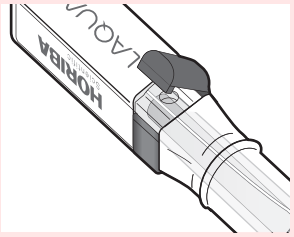

Tip

It is recommended to place the electrode in the electrode stand.

9 Shake the electrode to remove any air bubbles remaining on the ion selective membrane.

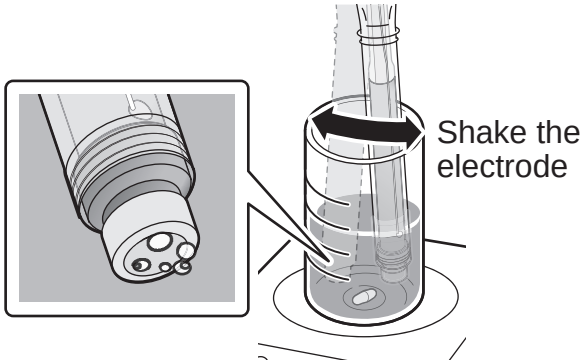

Note

If air bubbles remain on the ion selective membrane, it may result in inaccurate measurement.

View video

MOVIE

10 Perform the first calibration.

Wait for a stable reading and perform the first calibration as described in the Meter Instruction Manual.

11 When the first calibration is finished, take out the electrode from the solution for calibration.

12 Rinse the electrode with pure water.

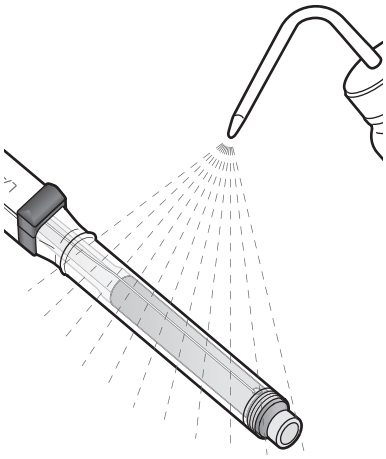

13 Wipe off the moisture.

Wipe off the moisture using soft and clean lint-free paper, or cloth.

14 Soak the electrode in the second solution for calibration prepared in step 4.

Place the electrode fully into the solution for calibration so that the solution comes up to the liquid junction.

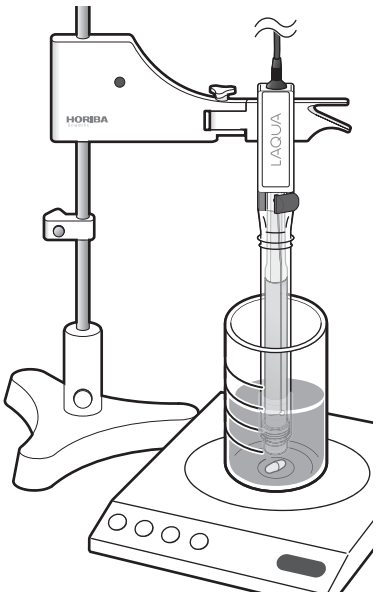

Note

- **Do not touch the stir bar with the electrode. It may damage the electrode.**
- **Make sure that the rubber stopper of the internal solution fill port is open during calibration.**
  If it is closed, the internal solution does not ooze out very much from the liquid junction.
  As a result, the potential of the reference electrode will become unstable and susceptible to stir.

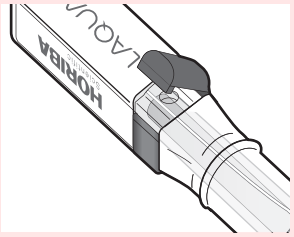

Tip

It is recommended to place the electrode in the electrode stand.

15 Shake the electrode to remove any air bubbles remaining on the ion selective membrane.

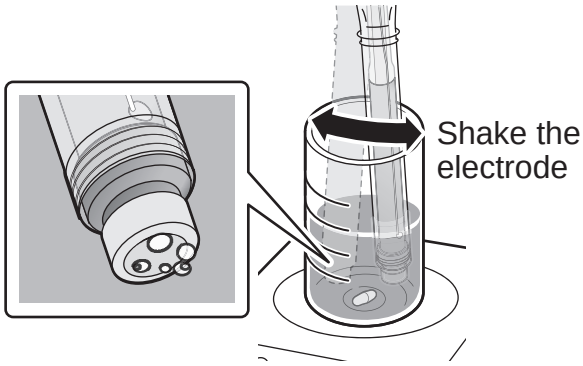

Note

If air bubbles remain on the ion selective membrane, it may result in inaccurate measurement.

View video

MOVIE

16 Perform the second calibration.

Wait for a stable reading and perform the second calibration as described in the Meter Instruction Manual.
When the second calibration is finished, the slope (%) of the electrode is displayed.

17 Check the slope (%) on the meter.

For details on how to check the slope (%), refer to the Meter Instruction Manual.

Note

Check that slope is at least 80%.
If the slope is less than 80%, the measurement may not be performed accurately.
The possible causes of calibration failure are:

- **Dirt on the ion selective membrane or liquid junction**
- **Change in the internal solution concentration**
- **Change in composition and concentration of the standard solution**

Refer to "When accurate measurement is not possible" (page 48) to resolve the cause and then perform the calibration again.

18 When the second calibration is finished, take out the electrode from the solution for calibration.

19 Close the rubber stopper of the internal solution fill port.

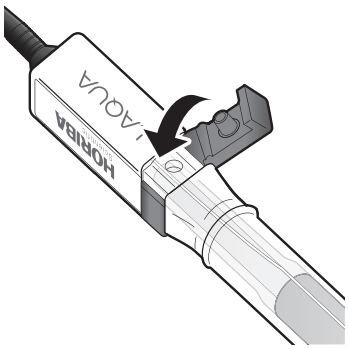

20 Rinse the electrode with pure water.

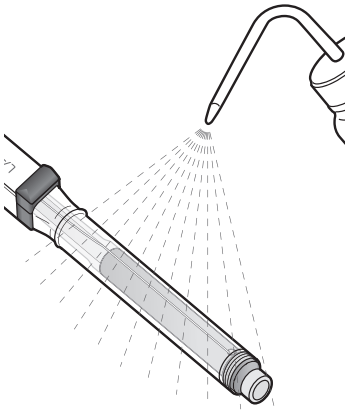

21 Wipe off the moisture.

Wipe off the moisture using soft and clean lint-free paper, or cloth.

> **Tip**
> When disposing of the standard solution, and paper or cloth soaked in the standard solution, follow the local rules and regulations.

Measurement

This chapter describes measurement.

Requirements for sample and standard solutions 30

Measurement hints 31

Measurement units 31

Measurement operation..... 32

Requirements for sample and standard solutions

The requirements for sample solutions and standard solutions are as follows:

- Sample solutions shall not contain organic substances.
  It may cause electrode deterioration.
- The temperatures of sample solution and standard solution shall be kept at 50°C or less.
  Exceeding 50°C may cause electrode deterioration.
- The standard solution in calibration and the sample solution in measurement shall have almost the same temperature. Match the temperature as close as possible by, for example, using a thermostatic bath.
  The temperature difference may cause measurement errors.
- The ISA shall be added into the sample solution (Step 1 of "Measurement operation" (page 32)).
  If not, the measurement values may have errors. (“About activity” (page 58)).

Measurement hints

- A gradual rise in solution temperature due to the magnetic stirrer generating heat may cause an apparent potential drift.
  When it happens, reduce the influence of the temperature changes by covering the magnetic stirrer with heat insulation such as polystyrene foam or using a thermostatic bath.
- During measurement, soak the electrode fully into the sample solution so that the solution comes up to the liquid junction.
- The measurable pH range differs depending on the type and structure of the ion selective electrode.
  The pH range is generally smaller when the concentration of the ions to be measured is lower.
  If the pH of the sample solution has exceeded the measurable pH range, accurate measurement may not be possible ("Impact of pH" (page 61)).

Measurement units

This product can measure calcium ion concentration in two types of units. Refer to the following table to convert the measurement unit.

Table 1 Ca^{2+} concentration measurement unit conversion table

Ca^{2+} concentration [mol/L]	Ca^{2+} concentration [mg/L]
1×10^{-4}	4.008
1×10^{-3}	40.08
1×10^{-2}	400.8
1×10^{-1}	4008

Measurement operation

Before operation

Note

The calibration characteristics vary depending on the temperature.
The standard solution in calibration and the sample solution in measurement shall have almost the same temperature. Match the temperature as close as possible by, for example, using a thermostatic bath.
The temperature difference may cause measurement errors.

Items to be prepared

☐ Syringe

☐ ISA

1 Prepare the sample solution.

In this section, the case using sample solution (250 mg/L) is used as an example in the following steps.

(1) Put 50 mL of sample solution (250 mg/L) in a 100 mL beaker.

(2) Add 1 mL of ISA.

(3) Stir the solution slowly with a magnetic stirrer.

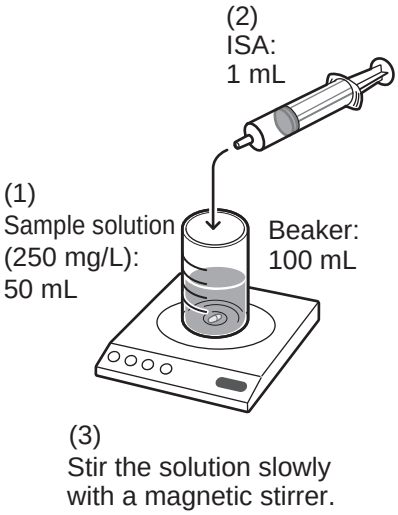

Note

It is best to control the stirring speed so that the stir bar will rotate 3 or 4 turns per second. If swirling occurs on the surface, the stirring speed is too fast. Reduce the speed to a level where swirling does not occur.

Note

About the amount of ISA
("About activity" (page 58))

In the case using different volume from the example, note that the volume ratio shall be the sample solution:the ISA = 50:1.

2 Rinse the electrode with pure water.

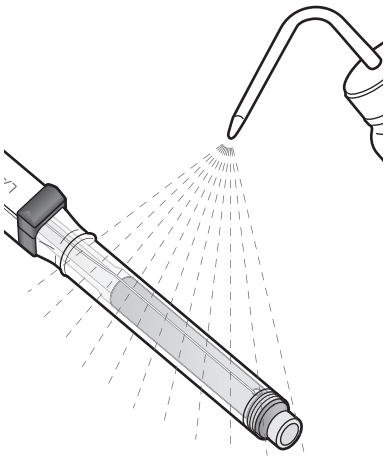

3 Wipe off the moisture.

Wipe off the moisture using soft and clean lint-free paper, or cloth.

4 Open the rubber stopper of the internal solution fill port.

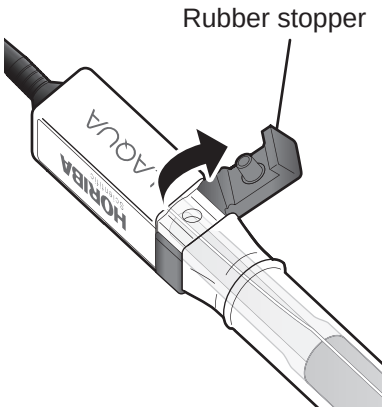

5 Soak the electrode in the sample solution prepared in step 1.

Place the electrode fully into the sample solution so that the solution comes up to the liquid junction.

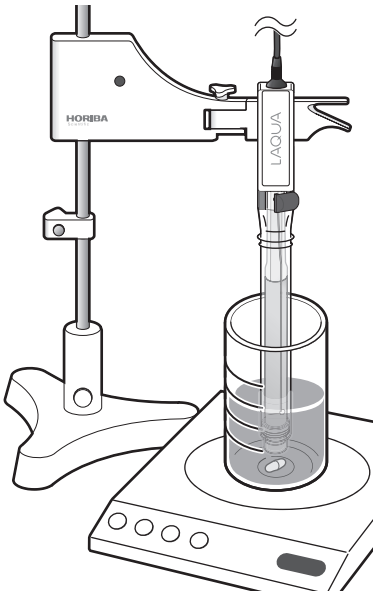

Note

- **Do not touch the stir bar with the electrode. It may damage the electrode.**
- **Make sure that the rubber stopper of the internal solution fill port is open during measurement.**
  If it is closed, the internal solution does not ooze out very much from the liquid junction. As a result, the potential of the reference electrode will become unstable and susceptible to stir.

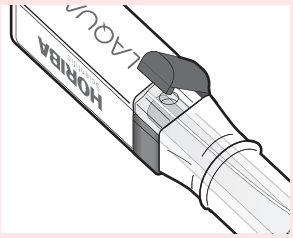

Tip

- It is recommended to place the electrode in the electrode stand.
- If gravel or other foreign matters gets in the sample solution, for example, in outdoor measurement, attach the protective pipe. It will protect the ion selective membrane from foreign matters in the sample solution.

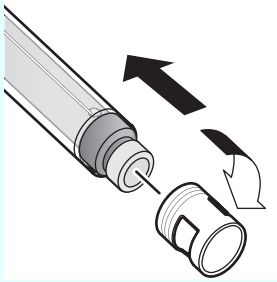

6 Shake the electrode to remove any air bubbles remaining on the ion selective membrane.

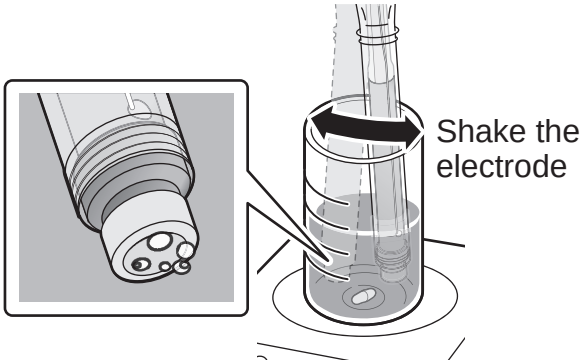

Note

If air bubbles remain on the ion selective membrane, it may result in inaccurate measurement.

View video

MOVIE

7 Perform the measurement.

Wait for a stable reading and measure the ion concentration as described in the Meter Instruction Manual.

8 When the measurement of the ion concentration is finished, take out the electrode from the sample solution.

9 Close the rubber stopper of the internal solution fill port.

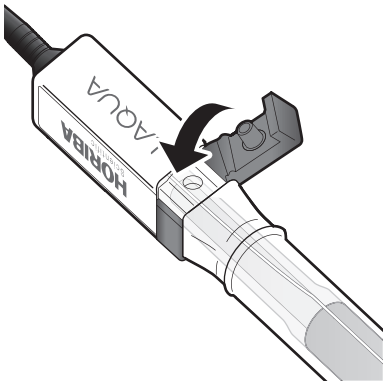

10 Rinse the electrode with pure water.

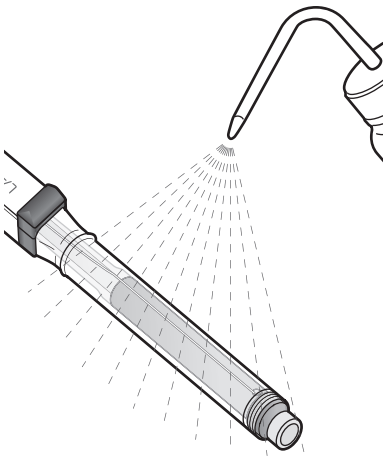

11 Wipe off the moisture.

Wipe off the moisture using soft and clean lint-free paper, or cloth.

After Measurement

This chapter describes cleaning of the electrode after measurement.

How to clean the electrode..... 38

How to clean the electrode

Clean the electrode after use as described in the following procedure.

View video

MOVIE

Item to be prepared

☐ Dropper

1 Open the rubber stopper of the internal solution fill port.

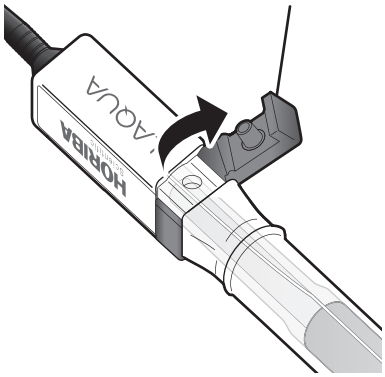

2 Remove the internal solution in one of the following ways.

<Discharging from the liquid junction>
Spread soft and clean lint-free paper, or cloth beneath the electrode and then press the electrode against it from above.

The inside of the electrode moves up and down.
Continue pressing from above until all of the internal solution is discharged.

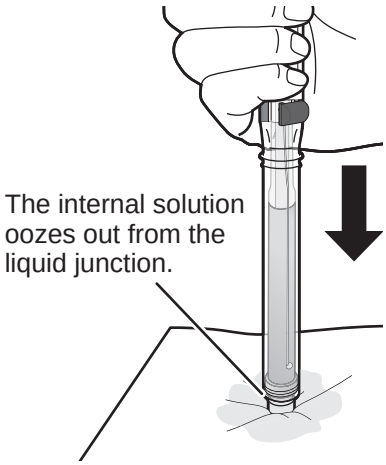

Note

When pressing the electrode from above, do not press too strong or have an impact on the electrode.
It may damage the electrode.

<Extracting from the internal solution fill port>
Turn the electrode upward and extract the internal solution with a dropper.

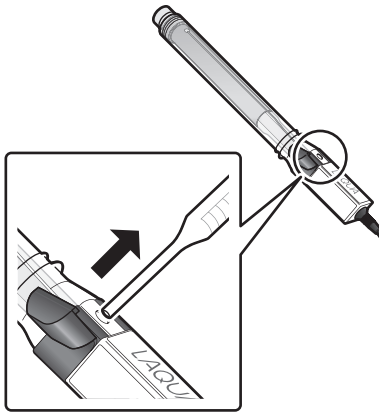

Tip

When disposing of the internal solution and paper or cloth with internal solution adhered to it, follow the local rules and regulations.

3 Close the rubber stopper of the internal solution fill port.

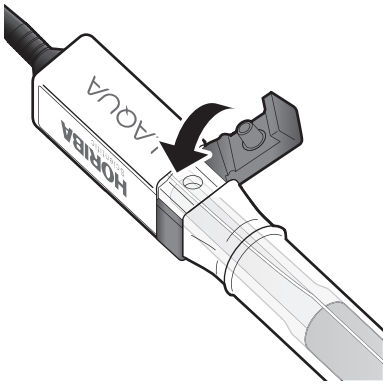

4 Rinse the electrode with pure water.

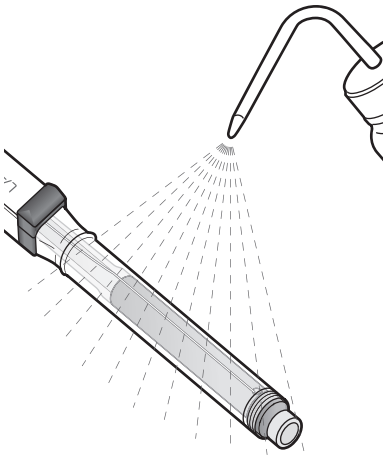

5 Wipe off the moisture.

Wipe off the moisture using soft and clean lint-free paper, or cloth.

6 Make sure that there are no dirt and crystals of internal solution adhered to the area around the liquid junction.

If dirt remains, repeat steps 4 and 5.

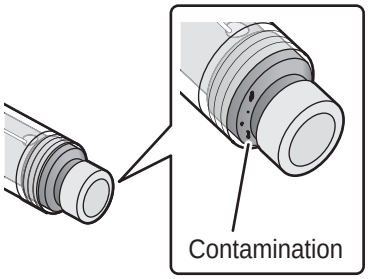

7 Attach the protective cap.

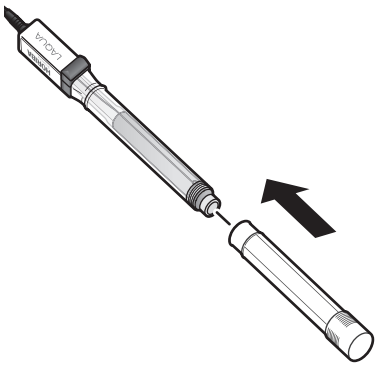

Note

Do not get water and foreign matters inside of the protective cap when attaching it to the electrode. It may shorten the lifespan.

Memo

Maintenance

This chapter describes the storage procedure of the electrode as well as the lifespan and replacement procedure of each part.

Storage 44

Main unit of electrode.....44

Consumables..... 45

Consumables and replacement periods 45

Storage

When the electrode will not be used for two weeks or longer, store it as described in the following procedure.

Main unit of electrode

1 **Clean the electrode and discharge the internal solution. ("After Measurement" (page 37))**

2 **Attach the protective cap.**

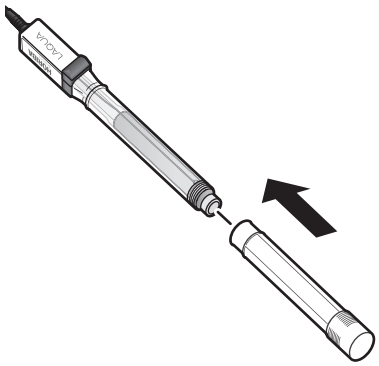

Note

- **Do not get water and foreign matters inside of the protective cap when attaching it to the electrode. It may shorten the lifespan.**
- **When you will use the electrode again, perform the operation from filling with internal solution ("Filling with internal solution" (page 12)).**

Consumables

Consumables and replacement periods

The consumables that need to be replaced and the replacement periods are as follows. Replace each part at the appropriate timing to ensure accurate measurement.

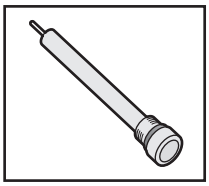

Ion electrode tip

Service life	approx. 1 year → Replace
Hours of use	Replace after approx. 400 hours

Replace consumables at the period whichever occurs first; approx. one year after purchase or after approx. 400 hours of use, depending on sample solution, measurement frequency, and measurement environment.

Tip

- Ion electrode tip replacement guide
  When the slope displayed on the meter is less than 80% in calibration, clean the electrode ("How to clean the electrode" (page 38)) and perform the calibration again. If the slope is still less than 80% after that, replace the ion electrode tip.
- The main unit of the electrode and ion electrode tip are not repairable parts.

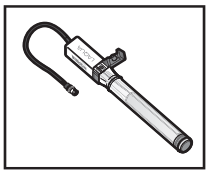

Main unit of electrode

Service life	1 year / approx. 2 years → Replace
Hours of use	Replace after approx. 800 hours

Replace consumables at the period whichever occurs first; approx. two years after purchase or after approx. 800 hours of use, depending on sample solution, measurement frequency, and measurement environment

Note

Single piece of the electrode main unit is not available for sale.
When replacing the main unit of electrode, purchase the combination type calcium ion selective electrode including the ion electrode tip (Part number:3200697410).

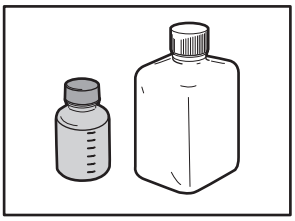

Standard solution

Use this up before the expiration date displayed on the bottle.

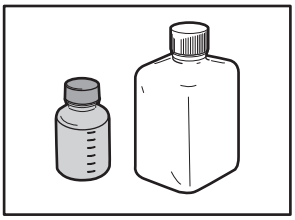

Internal solution

Use this up before the expiration date displayed on the bottle.

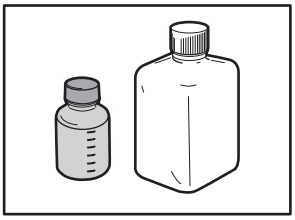

ISA

Use this up before the expiration date displayed on the bottle.

Troubleshooting

This chapter describes the measures to take when accurate measurement is not possible.

When accurate measurement is not possible..... 48

When accurate measurement is not possible

When accurate measurement is not possible, check the following.

Table 2 Check list

Check item	Solution	View in video
Are the temperatures of the standard solution and sample solution the same?	The standard solution in calibration and the sample solution in measurement shall have almost the same temperature. Match the temperature as close as possible by, for example, using a thermostatic bath. The temperature difference may cause measurement errors. (“Requirements for sample and standard solutions” (page 30))	—
Is the stirring solution speed appropriate?	It is best to control the stirring speed so that the stir bar will rotate 3 or 4 turns per second. If swirling occurs on the surface, the stirring speed is too fast. Reduce the speed to a level where swirling does not occur. (“Impact of stirring” (page 63))	

Check item	Solution	View in video
Is the temperature of the solution being stirred rising?	A gradual rise in solution temperature due to the magnetic stirrer generating heat may cause an apparent potential drift. Reduce the influence of the temperature changes by covering the magnetic stirrer with heat insulation such as polystyrene foam or using a thermostatic bath. (“Measurement hints” (page 31))	—
Is measurement being performed while air bubbles are on the ion selective membrane?	Shake the electrode to remove any air bubbles remaining on the ion selective membrane. If air bubbles remain on the ion selective membrane, it may result in inaccurate measurement. (Note on page 35)	
Is a solution at a temperature outside the measurement temperature range being measured?	Adjust the temperature of the solution so that it is within the measurement temperature range before measurement. If not, it may cause measurement errors as well as damages or deterioration to the electrode. (“Specifications” (page 68))	—
Is the electrode dirty?	Rinse the electrode. A dirty electrode will cause measurement errors or a decrease in the response rate during calibration. (“Rinsing the electrode” (page 15))	

Check item	Solution	View in video
Has the internal solution been replaced?	Replace the internal solution before each measurement. If not, the internal solution concentration will change and it will cause measurement errors. (“How to clean the electrode” (page 38))	
Is there a sufficient amount of internal solution?	Make sure that the surface of the solution is just below the internal solution fill port.	
Was the standard solution made using pure water?	Prepare the standard solution using pure water. Preparing the standard solution with other than pure water will cause measurement errors. (“Standard solutions” (page 18))	—
Is calibration performed before each measurement?	Perform calibration before each measurement. (“Calibration operation” (page 19))	—
Is the electrode temperature same as measurement place?	Wait until the temperature of the electrode becomes the temperature of that place before using the electrode.	—
Is the ion selective membrane or liquid junction dirty?	Rinse the electrode. (“How to clean the electrode” (page 38))	
Has the internal solution concentration changed?	Replace the internal solution completely. (“How to clean the electrode” (page 38))	—

Check item	Solution	View in video
Has the composition and the concentration of the standard solution changed?	If the standard solution has expired, replace it with a new one. Use up the standard solution within approximately 3 months after opening the bottle. Do not return the standard solution to its bottle once it has come out of the bottle. (“Consumables” (page 45))	—
Is the discharging amount of internal solution appropriate?	Press the upper gray part of the electrode cap. If the internal solution is discharged too much, it may cause measurement errors or a decrease in the response rate during calibration.	

Memo

Reference

This chapter describes general matters regarding ion selective electrodes.

Ion selective electrodes..... 54

Measurement principle of ion selective electrode 56

About activity.....58

Characteristics of calcium ion selective electrode 60

Measurement range.....60
Impact of pH.....61
Impact of temperature.....62
Impact of stirring.....63
Impact of coexistent ions.....63
Response time.....65
Impact of light.....65
Standard solutions 66

Ion selective electrodes

The ion concentration is measured as the potential difference between an ion selective electrode and a reference electrode which are soaked into the sample solution and connected with an ion meter or a meter with an ion measurement function. The function of each electrode is shown in the table below.
The method of measuring ion concentration using two electrodes in this way is called the ion electrode method.

Table 3 Electrode types

Electrode type	Electrode function
Ion selective electrode	An electromotive force is generated through the ion selective membrane by the difference of the ion concentration between in the internal solution and in the sample solution.
Reference electrode	This maintains a stable potential no matter what kind of sample solution or standard solution is present.

The following figure shows the structure of a combination type ion selective electrode where two electrodes are integrated.

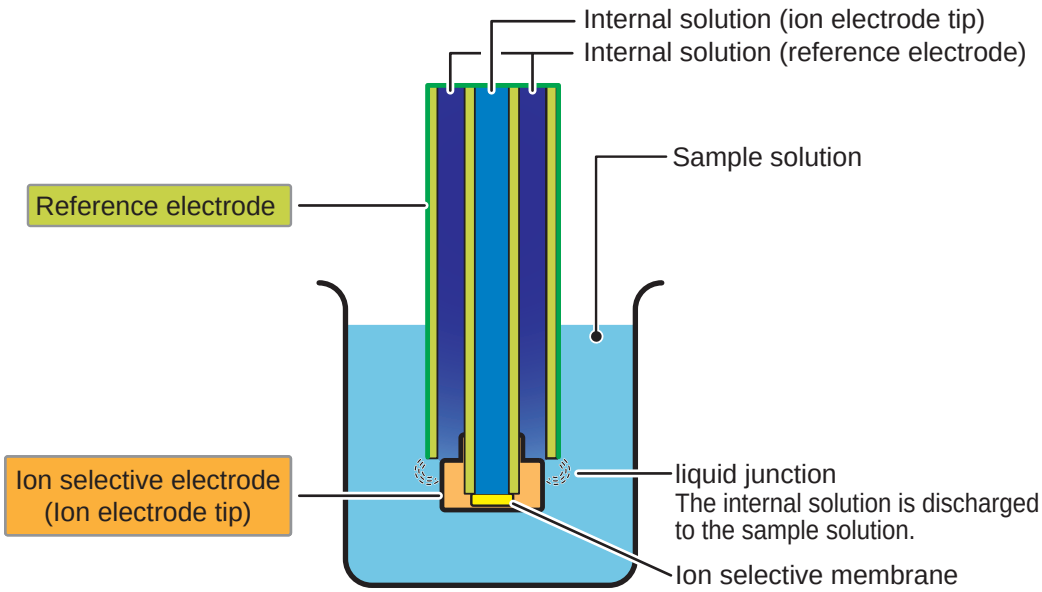

Fig. 4 Structure of combination type ion selective electrode

Mechanism with which the reference electrode maintains a stable potential

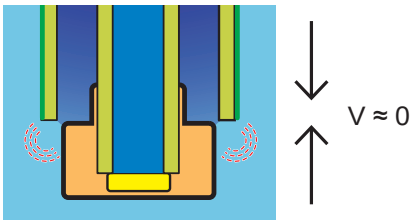

Fig. 5 State of liquid junction of reference electrode

The reference electrode generates the potential that is used as the reference against the potential measured with the ion selective electrode. The generated potential needs to be stable with very little variation no matter what kind of sample solution or standard solution is present.

The internal solution in the reference electrode is discharged to the sample solution or standard solution as a mechanism of generating such a stable potential. The stable potential with almost no change, V≅0, can be generated by the diffusion of the outflow of the internal solution into the sample solution or standard solution.

Tip

If the internal solution in the reference electrode is not discharged, the ion concentration cannot be measured accurately because the reference potential may change depending on the sample solution or the standard solution.

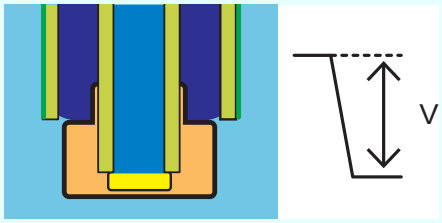

It happens if the amount of the internal solution in the reference electrode is insufficient or the rubber stopper is not opened which does not make the internal solution exposed to the atmosphere.

Measurement principle of ion selective electrode

If specific ions exist in the sample solution, the ion selective membrane of the ion selective electrode generates a potential that corresponds to the concentration of those ions. The generated potential is measured as the potential difference on the basis of the reference electrode using an ion meter or meter with an ion measurement function.
The measured potential difference and the logarithm of the concentration (activity) (Page 58) of the ions to be measured in the sample solution are in a proportional relationship which can be represented by the following equation.

$$E = E_0 + (2.303\ RT/nF)\ \log\gamma C$$

E: Measured electrode potential (V)
E_0: Reference potential depending on the ion selective electrode (V)
(The reference potential of the reference electrode and the potential difference of the liquid junction are included.)
F: Faraday constant (96480 C mol^{-1})
R: Gas constant (8.314 JK^{-1} mol^{-1})
T: Absolute temperature (K)
n: Ion charge number
γ: Activity coefficient (Page 58)
C: Ion concentration

This equation is called the Nernst equation, and is the base of ion concentration measurement using an ion selective electrode.
(2.303 RT/nF) is the change of the electrode potential generated when the ion concentration (activity) is changed by a factor of ten times, and is referred to as the sensitivity, potential gradient, slope, or Nernst coefficient.
According to the above equation, if the potential gradient is determined by the calibration using the standard solutions, the concentration (activity) A of the targeted ions can be measured by obtaining electrode potential E of the ion selective electrode in the sample solution.

If the ion concentration (activity) is set to the logarithmic axis, a linear relationship like in the graph below is created between the electrode potential measured with the ion selective electrode and the ion concentration (activity).

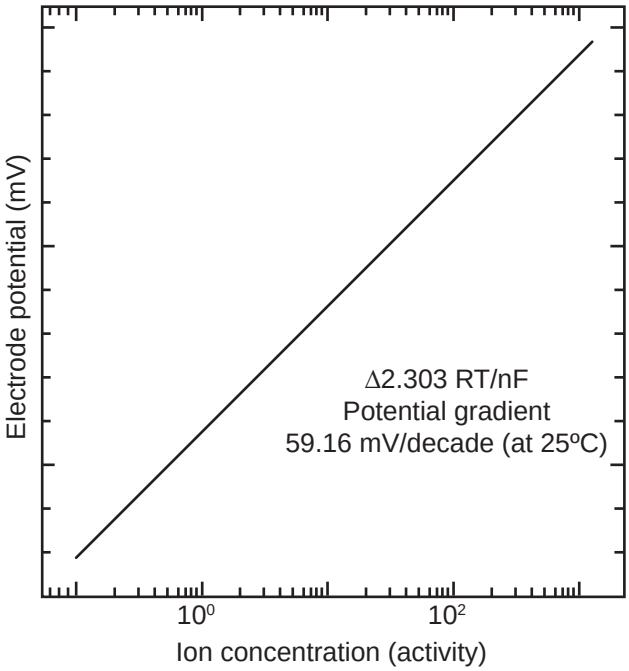

Fig. 6 Relationship between monovalent cation concentration (activity) and electrode potential

Tip

To perform the above quantitative analysis using an ion selective electrode, either (1) use an ion meter or meter with an ion measurement function that has a logarithmic arithmetic function or (2) create a calibration curve using semi-logarithmic graph paper.

About activity

The ion concentration can be accurately measured by performing calibration and measurement using an ISA.
The following describes the relationship between the ion concentration and activity and the reason for adding an ISA.

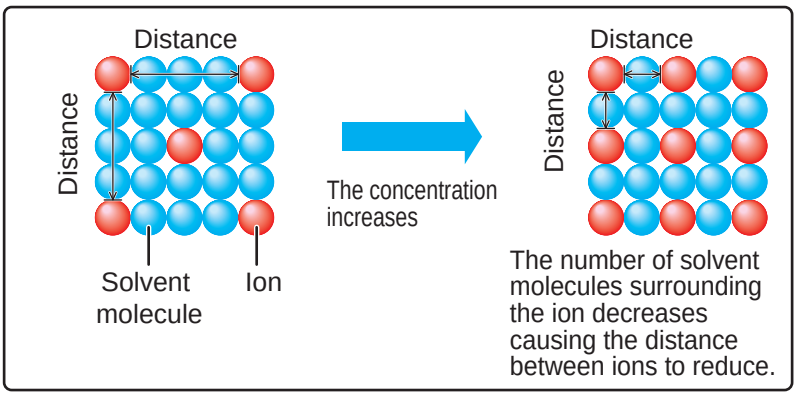

Fig. 7 Difference in state of solution depending on ion concentration

If specific ions exist in the sample solution, the ion selective membrane of the ion selective electrode generates a potential that corresponds to the concentration of those ions. The generated potential is measured as the potential difference on the basis of the reference electrode by using an ion meter or meter with an ion measurement function. A proportional relationship exists between the measured potential difference and the logarithm of the concentration of ions to be measured in the sample solution which can be represented by the Nernst equation (page 56).
According to the above equation, if the potential gradient is determined by the calibration using the standard solutions, the concentration of the targeted ions can be measured by obtaining electrode potential E of the ion selective electrode in the sample solution.
The ion concentration is getting increased, however, the movement of the ion is getting restricted. As a result, the ions, which can not reach the ion selective membrane, do not contribute to the reaction to measure the potential.
Accordingly, “the amount of ions capable of actually contributing to the reaction of potential measurement in the solution” needs to be represented as the effective concentration. This “effective concentration” is known as the activity.

The activity is a concentration of ions in the solution that is corrected using a coefficient called the activity coefficient, and the relationship between them can be expressed with the following relational expression.

Activity (a) = Activity coefficient (γ) · Ion concentration (C)

Table 4 shows the relationship between the ion concentration and the activity coefficient.
From this table, you can see that when the ion concentration becomes lower than 1×10^{-3} mol/L, the activity coefficient becomes a value close to 1, and as it becomes higher than 1×10^{-3} mol/L, the activity coefficient becomes lower than 1.
If the activity coefficient becomes lower than 1 (activity < ion concentration), an error occurs in the potential measurement. An ISA is used to reduce this error. An ISA is generally selected so that it does not react with the ions to be measured and does not affect the measured potential.
The measurement error can be reduced because adding the ISA enables to maintain the ion strength constant and to adjust the activity coefficients of the sample solution and the standard solution almost at the same value.

Table 4 (Example) Activity coefficient for monovalent ion concentration

Ion concentration (C) mol/L	Activity coefficient (γ)
1×10^{-5}	0.998
1×10^{-4}	0.988
1×10^{-3}	0.961
1×10^{-2}	0.901
1×10^{-1}	0.751

Characteristics of calcium ion selective electrode

Measurement range

The range where linearity is established between the logarithm of the ion concentration and the electromotive force is called the measurement range.
In general, the range for measuring ion concentration using ion selective electrodes is a maximum of around 1×10^{-1} mol/L and a minimum of around 1×10^{-6} mol/L to 1×10^{-5} mol/L.
Furthermore, when lower concentration is measured where the linearity is not established, perform calibration at two points in the lower concentration range.

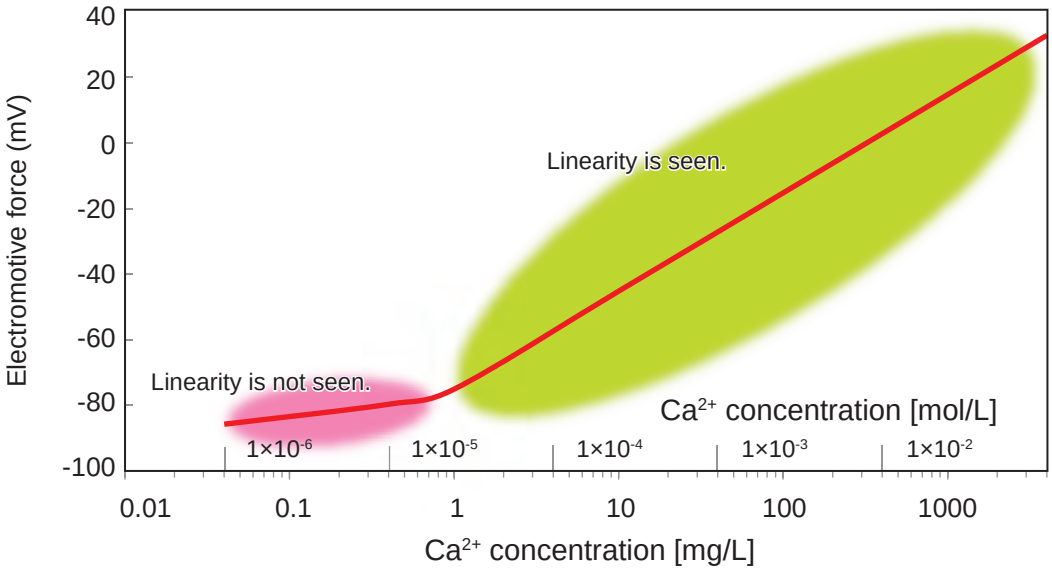

Fig. 8 Calibration curve of calcium ion selective electrode

Impact of pH

The usable pH range is determined depending on the type and structure of the ion selective electrode.
In general, this range is smaller when the concentration of the ions to be measured is lower.
Also, depending on the ion selective electrodes, the components of the ion selective membrane may be dissolved depending on the pH or the electrode potential may change due to the impact of the pH.
Furthermore, the impact of the pH may cause a decrease in the slope of the ion selective electrode, or parallel shifting of the calibration curve.
To prevent these effects, set the pH to an appropriate value in advance and keep it constant.

One simple method to set the pH of the sample solution to an appropriate value for measurement is to prepare a pH buffer solution (not containing interfering ions) that will not interfere with the ion selective electrode in advance, and add a small amount of it to the sample solution.

◆ How to prepare a sample solution

If the pH of the sample solution is below 5 or more than 11, adjust the pH as described in the following procedure.

- If the pH of the sample solution is less than 5, adjust the pH in the range of 5 to 11 by adding sodium hydroxide.
- If the pH of the sample solution is more than 11, adjust the pH in the range of 5 to 11 by adding hydrochloric acid.

Impact of temperature

The potential gradient measured by the ion electrode method is impacted by the temperature of the sample solution in accordance with the Nernst equation. The higher the temperature is, the larger the potential gradient is. The lower the temperature is, the smaller the potential gradient is.
The standard solution in calibration and the sample solution in measurement shall have almost the same temperature. Match the temperature as close as possible.

Table 5 Relationship between temperature of ion selective electrode and theoretical slope

Unit: mV/decade (mV/concentration change of 10 times)

		Temperature (°C)						
		0	10	20	25	30	40	50
Theoretical slope	Monovalent ions	54.20	56.18	58.16	59.16	60.15	62.13	64.11
	Divalent ions	27.10	28.09	29.08	29.58	30.07	31.07	32.06

The optimal way to minimize the impact of temperature on the measurement of the Ca^{2+} concentration is to reduce the difference between the temperature of the standard solution in calibration and the temperature of the sample solution in measurement to ±1°C.
The following table shows the change in the potential gradient of the calcium ion selective electrode depending on the temperature.

Table 6 Relationship between temperature of calcium ion selective electrode and theoretical slope

Temperature [°C]	Theoretical slope of calcium ion selective electrode [mV/decade]
0	27.10
10	28.09
20	29.08
25	29.58
30	30.07
40	31.07
50	32.06

If the temperature of the sample solution in measurement differs from the temperature of the standard solution in calibration, perform calibration again.
When the electrode is moved to a place that has a different temperature, wait until the temperature of the electrode becomes same as the temperature of that place before using the electrode.

Impact of stirring

The impacts on the measurement of the electromotive force by stirring the sample solution are, for example, slow response, inability to measure the low concentration solution, and the change of the electrode potential.
The optimal stirring speed is to stir around 3 or 4 turns per second with a stir bar.
If swirling occurs on the surface, the stirring speed is too fast. Reduce the speed to a level where swirling does not occur.

Impact of coexistent ions

Although ion selective electrodes have good selectivity with respect to the ions to be measured, they may react to the other ions.
The ions which interfere the measurement of the concentration of the ions to be measured are called “interfering ion”.
Therefore, when using the ion electrode method, it is important to know the effects of coexistent ions and take measures to avoid them.

The impact that coexistent ions will have on electromotive force measurements with the ion electrode method can be predicted from the structure material of the ion selective membrane as well as the reactivity of coexistent ions. For example, in the case of solid membrane electrodes, coexistent ions that may form compounds with poor solubility or may form complex salts with the structure material of the ion selective membrane are likely to have a significant impact, whereas in the case of liquid membrane electrodes, coexistent ions that may form an ion association with the components of the ion selective membrane are highly likely to have an impact.

◆ About interfering ions in Ca^{2+} concentration measurement

When a high concentration of cations exists, the calcium ion selective electrode will be affected by, for example, measurement errors and electrode drift due to the interference by cations.
The following table lists the cations that cause a 10% error with respect to the Ca^{2+} concentration, and their corresponding concentrations.

Table 7 Substances that cause a 10% error in the reading, and their concentrations

Unit: mg/L

Interfering cation	Ca^{2+} concentration		
	1 mg/L	10 mg/L	100 mg/L
Fe^{2+}	1	6	56
Zn^{2+}	1	7	65
Cu^{2+}	64	640	6400
Na^{+}	230	2300	23000
Mg^{2+}	240	2400	24000
K^{+}	390	3900	39000

If drift of the potential or reduction in the response speed occurs, high interference by the ions shown in the table is likely to be occurring.
In such a case, soak the calcium ion selective electrode in pure water for one hour and then soak it in the standard solution for a few hours to restore a normal state.

Response time

The response times of ion selective electrodes differ depending on factors such as the type and structure of the electrode, and type and concentration of ions.
In general, the response time tends to be shorter when the ion concentration is high and longer when the ion concentration is low.
Furthermore, the response time may become shorter when a high concentration solution is measured after measuring a low concentration solution, while the opposite case may cause the response time to become longer.
The time required to reach a reading value that is 95% stabilized is within 30 seconds approximately in the case of a standard solution with a concentration ranging from 10 mg/L to 100 mg/L.

Impact of light

With some types of ion selective electrodes (e.g. non-crystalline solid membrane electrodes), light may have an impact that causes the electromotive force to change.
If you will use one of these types, it is not desirable to take measurements in a place exposed to strong light or where the luminous intensity changes.
When using such an electrode, avoid the exposure of the light by, for example, using a brown beaker.
Generally, electrodes with the ion selective membrane whose main component is silver halide, such as Cl^-, Br^-, I^-, CN^-, may receive the impact of the light.

Standard solutions

Selecting standard solutions

- Perform calibration using standard solutions of 100 mg/L and 1000 mg/L. Approximate concentrations can be measured.
- For more accurate measurements, prepare standard solutions which have the following concentration relationship for calibration.

Standard solution with low concentration < Sample solution < Standard solution with high concentration

In this case, prepare two standard solutions so that the concentration of one of the two standard solutions is approximately 1/10 of that of the other standard solution.

Temperatures of the standard solution and sample solution

When taking measurements, match the temperature of the standard solution in calibration and the temperature of the sample solution in measurement.
This reduces the errors in the ion concentration measurement due to the electromotive force changes caused by the temperature changes of the ion selective electrode and reference electrode.
Measurement errors become larger as the difference between the temperatures of the standard solution and sample solution becomes larger.

Handling of standard solutions after use

Do not return a standard solution to its original container after it has been used once.
The composition and concentration of the standard solution will have changed, which will cause measurement errors because accurate calibration will not be possible.

Storing standard solutions

Put the standard solution in a container that can be hermetically sealed, seal the container hermetically, and store it in a cool and dark place. If standard solution is stored in a state in which it is open to the atmosphere, the concentration will change due to, for example, evaporation and the mixing of impurities.

Material

This chapter describes the specifications, external dimensions, and consumables of the product.

Specifications 68

External dimensions 69

Consumables..... 70

Specifications

The following table shows the specifications of the product.

Table 8 Specifications of combination type calcium ion selective electrode

Item	Description
Operating temperature range	0°C to 50°C
Internal electrode	Ag/AgCl (silver/silver chloride) electrode
Internal solution	3 mol/L NH_4Cl
Liquid junction	Movable sleeve type
Wetted part (part contacting sample solution) material	PVC, PSU
Measurement range	0.4 mg/L to 40080 mg/L Ca^{2+} (1×10^{-5} mol/L to 1 mol/L Ca^{2+})
Measurement accuracy (*1)	±4%
pH range (*2)	pH 5 to pH 11 (4.0 mg/L Ca^{2+})
Potential gradient (*3)	25 mV/decade to 32 mV/decade
Insulation resistance	5×10^{10} Ω
Portion to be placed	From ion selective membrane to internal solution fill port
Connector and cable length	BNC, 1 m

*1: The measurement accuracy is the difference between the measured value and the assigned value of the 100 mg/L standard solution after the two points calibration using the 10 mg/L and the 100 mg/L standard solutions. The temperature in the calibration and in the measurement is 25°C.

*2: The ion concentration value enclosed in ( ) is the measurable pH tolerance range.
However, the tolerance range differs depending on the ion concentration.

*3: This is the electrode potential gradient in the calibration using the 10 mg/L and the 100 mg/L standard solutions at 25°C.

External dimensions

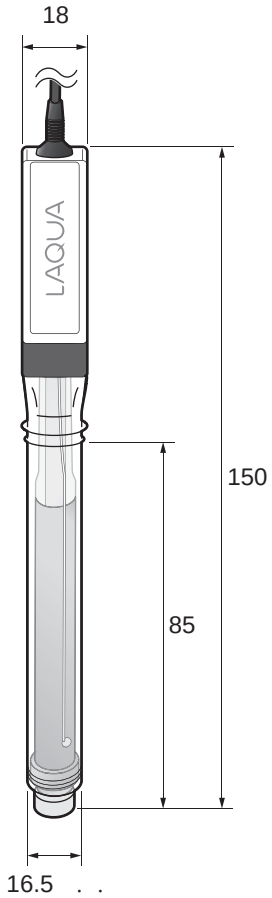

[Unit: mm]

Consumables

Consumables can be purchased from your nearest local representative by notifying the product name and the part number.

Table 9 Consumables

Product name	Model	Specifica-tions	Part number
Calcium ion selective electrode	6583S-10C	-	3200697410
Calcium ion selective electrode tip	7683S	Electrode tip	3200697414
1000 mg/L calcium ion standard solution	500-CA-SH	500 mL	3200697175
100 mg/L calcium ion standard solution	500-CA-SL	500 mL	3200697176
Calcium ion selective electrode inner filling solution	500-CA-IFS	500 mL	3200697177
ISA for calcium ion selective electrode	500-CA-ISA	500 mL	3200697178

HORIBA Advanced Techno
31, Miyanonishi-cho, Kisshoin Minami-ku, Kyoto 601-8306, Japan
http://www.horiba-adt.jp

For any questions regarding this product, please contact your local agency, or inquire from the following website.
http://global.horiba.com/contact_e/index.htm