Diagonal Cutting Pliers (w/ Spring)

130mm CN-130NS / 160mm CN-160NS JISSpringnew!

- Coil spring loaded.
- Suitable for continuous cutting works.
- For copper and iron wires.
- [Normal] CN-130N,CN-160N,CN-175N
- [w/ Stripper] CN-130,CN-160
- [w/ Spring] CN-130NS,CN-160NS
- [w/ Stripper & Stripper] CN-130S,CN-160S

Specifications

- Material | Carbon steel for machinery（S58C）
- Heat Treatment | Oxide-free heat treatment, Induction hardening on edge
- Body hardness [HRC] | 42～50
- Edge hardness [HRC] | 58～64
- Spring | Coil spring
- Handle cover | PVC dipping
- Surface treatment | Anti-rust oils

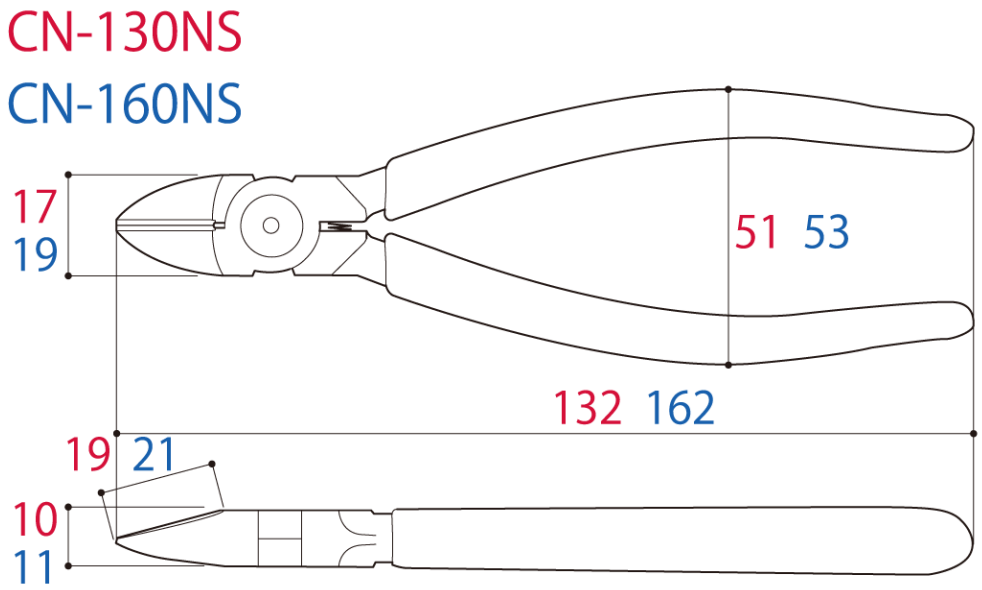

	Size[mm]					Weight [g]	EAN-code (4952269)
	Overall length	Head width	Head thickness	Handle width	Cutting edge length		
CN-130NS	132	17	10	51	19	105	114188
CN-160NS	162	19	11	53	21	160	114195

Cutting capacity (φmm)	Stainless	Soft iron	Copper	Stranded copper wire [mm²]
CN-130NS	1.2	1.8	2.6	2.0
CN-160NS	1.6	2.0	3.2	5.5

Note: Do not use to cut harder wire or anything above it rated the capacity.