# Thyro-AX® Power Controller

## User Manual

November 2018 57010176-00B

# COPYRIGHT

This manual and the information contained herein are the proprietary property of Advanced Energy Industries, Inc.

No part of this manual may be reproduced or copied without the express written permission of Advanced Energy Industries, Inc. Any unauthorized use of this manual or its contents is strictly prohibited. Copyright © 2017 - 2018 Advanced Energy Industries, Inc. All Rights Reserved.

# DISCLAIMER AND LIMITATION OF LIABILITY

The information contained in this manual is subject to change by Advanced Energy Industries, Inc. without prior notice. Advanced Energy Industries, Inc. makes no warranty of any kind whatsoever, either expressed or implied, with respect to the information contained herein. Advanced Energy Industries, Inc. shall not be liable in damages, of whatever kind, as a result of the reliance on or use of the information contained herein.

# PRODUCT USAGE STATEMENT

**WARNING:**

**Read this entire manual and all other publications pertaining to the work to be performed before you install, operate, or maintain this equipment. Practice all plant and product safety instructions and precautions. Failure to follow instructions can cause personal injury and/or property damage. If the equipment is used in a manner not specified by the manufacturer, the protection provided by the equipment might be impaired. All personnel who work with or who are exposed to this equipment must take precautions to protect themselves against serious or possibly fatal bodily injury.**

**Advanced Energy Industries, Inc., (AE) provides information on its products and associated hazards, but it assumes no responsibility for the after-sale operation of the equipment or the safety practices of the owner or user. NEVER DEFEAT INTERLOCKS OR GROUNDS.**

**AVERTISSEMENT:**

Lire ce manuel au complet ainsi que toutes les autres publications portant sur le travail à effectuer avant d'installer, d'utiliser ou d'entretenir cet équipement. Suivre toutes les consignes de sécurité et appliquer toutes les mesures de précautions de l'usine et du produit. Ne pas suivre ces consignes peut entraîner des blessures corporelles et/ou des dommages matériels. Si l'équipement est utilisé de manière non spécifiée par le fabricant, la protection fournie par l'équipement peut être compromise. Tous les membres du personnel travaillant sur cet équipement ou qui y sont exposés doivent prendre des mesures de précaution pour se protéger contre des blessures graves, voire mortelles.

Advanced Energy Industries, Inc. (AE) fournit des renseignements sur ses produits et les dangers qui y sont liés, mais elle ne peut être tenue responsable du fonctionnement après-vente de l'équipement ou des pratiques de sécurité du propriétaire ou de l'utilisateur. NE JAMAIS METTRE EN ÉCHEC OU CONTOURNER LES DISPOSITIFS DE PROTECTION DE VERROUILLAGE OU DE MISE À LA TERRE.

# TRADEMARKS

All Advanced Energy trademarks are the property of Advanced Energy Industries, Inc. For the list of Advanced Energy trademarks, visit: http://www.advanced-energy.com/en/Trademarks.html. Any unauthorized use of Advanced Energy trademarks is prohibited.

All other trademarks are the property of their respective owners.

# CUSTOMER FEEDBACK

Advanced Energy's technical writing staff has carefully developed this manual using research-based document design principles. However, improvement is ongoing, and the writing staff welcomes and appreciates customer feedback. Please send any comments on the content, organization, or format of this user manual to:

- tech.writing@aei.com

To order a manual, please contact Technical Support:

- technical.support@aei.com

# Table of Contents

## Chapter 1. Safety and Product Compliance Guidelines

Important Safety Information ..... 1-1
Danger, Warning, and Caution Boxes ..... 1-1
Safety Guidelines ..... 1-2
Rules for Safe Installation and Operation ..... 1-2
Interpreting Product Labels ..... 1-2
Product Compliance ..... 1-4
Product Certification ..... 1-5
Safety and EMC Directives and Standards ..... 1-5
Conditions of Use ..... 1-5
UL Markings and Requirements ..... 1-6
Environmental Compliance ..... 1-6
Interlocks and Limiting Conditions ..... 1-7

## Chapter 2. Product Overview

General Description ..... 2-1
Unit Features ..... 2-1

## Chapter 3. Specifications

Physical Specifications ..... 3-1
Electrical Specifications ..... 3-4
Cooling Specifications ..... 3-7
Environmental Specifications ..... 3-8
Type Designation ..... 3-9
Validity ..... 3-9
Type Code ..... 3-9

## Chapter 4. Communication Controls

Controls and Indicators ..... 4-1
Status Indicators ..... 4-2
Analog Outputs ..... 4-2
Fault, Status, and Limit Indicators ..... 4-2
Relay Indicator ..... 4-6
Analog and Digital I/O ..... 4-7
Multi I/O ..... 4-11
Touch Display ..... 4-13
Operation of the touch display ..... 4-14

Actual Value View And Actual Value Button ..... 4-15
Message Overview And Acknowledgment ..... 4-16
EasyStart ..... 4-17
EasyStart Identification Code ..... 4-19
Restriction Codes For Parameterization And Digital Setpoint 2 ..... 4-20
Save And Load Parameters With USB Drive ..... 4-20
Menu Structure ..... 4-22
Software User Interface ..... 4-24
Using the Software ..... 4-24
Installation ..... 4-24
Manage Devices and Files ..... 4-27
Parameters ..... 4-28

## Chapter 5. Installation, Setup, and Operation

Preparing to Install the Unit ..... 5-1
Spacing Requirements ..... 5-1
Dimensional Drawings ..... 5-1
Installation Requirements ..... 5-20
Unpacking the Unit ..... 5-21
Lifting the Unit ..... 5-21
Installing the Unit ..... 5-22
Mounting the Unit ..... 5-22
Grounding ..... 5-22
Connecting I/O and Auxiliary Connectors ..... 5-22
Connecting Load and Auxiliary Power ..... 5-23
Configuring the Load ..... 5-25
Installing IP20 Protection ..... 5-26
Connection Diagrams ..... 5-29
First Time Operation ..... 5-35
Normal Operation ..... 5-35
Operating Modes ..... 5-36
Full-Wave Switch (TAKT) ..... 5-36
Phase-Angle Firing (VAR) ..... 5-36
Half-Wave Switch QTM (Quick TAKT Mode) ..... 5-36
Switch Mode (SWITCH) ..... 5-37
Setpoint Control ..... 5-37
Switch Mode Setpoint ..... 5-37
Setpoint Processing ..... 5-37
Control Types ..... 5-38
Controlled Value ..... 5-39
Control Characteristic Curves ..... 5-39
Controller Response ..... 5-40
Monitoring ..... 5-41
Fuse Monitoring ..... 5-41
Mains Voltage Monitoring ..... 5-41
Device Temperature and Fan Monitoring ..... 5-41
Load Monitoring ..... 5-42

Automatic Measurement Of Nonlinear Load Characteristic With TeachIn Feature ..... 5-42
Manual Entry Or Change Of Nonlinear Load Characteristic With Thyro-Tool Pro Software ..... 5-42
Manual Entry Of Linear Load Resistor Value Via The Touch Display ..... 5-43
Mains Load Optimization ..... 5-45
Internal Mains Load Optimization ..... 5-45
Synchronization With Optional Thyro--Power Manager Accessory ..... 5-45
Synchronization With Optional Thyro- dASM Module or dASM Bus Module ..... 5-46
Software Synchronization with Solid Delay ..... 5-46
Basic Bus Module ..... 5-47
Maintenance ..... 5-48
Fan Maintenance ..... 5-48

## Chapter 6. Troubleshooting and Global Services

Troubleshooting Checklist ..... 6-1
Troubleshooting Unit Output ..... 6-2
Display Not Lit ..... 6-3
No Load Current ..... 6-3
Thyristors Are Set To Full Scale ..... 6-4
Other Malfunctions ..... 6-4
AE Global Services ..... 6-5
Primary Contact Information ..... 6-5
Alternate Contact Information ..... 6-5
Returning Units for Repair ..... 6-5

# List of Tables

Table 1-1. Interlocks and limiting conditions ..... 1-7
Table 3-1. Physical specifications ..... 3-1
Table 3-2. Type Range 230 V, 400 V, 500 V, 600 V ..... 3-1
Table 3-3. Terminal size ..... 3-2
Table 3-4. Electrical specifications ..... 3-4
Table 3-5. Voltage range ..... 3-5
Table 3-6. Model-specific specifications ..... 3-5
Table 3-7. Current derating ..... 3-7
Table 3-8. Fan current, air volume, and sound pressure ..... 3-8
Table 3-9. Environmental standard specifications ..... 3-8
Table 3-10. Climatic specifications ..... 3-8
Table 3-11. Type designation ..... 3-10
Table 4-1. Analog output default settings ..... 4-2
Table 4-2. Fault Messages ..... 4-3
Table 4-3. Status Messages ..... 4-4
Table 4-4. Limit Messages ..... 4-5
Table 4-5. AC phase connection (X1) ..... 4-9
Table 4-6. AC phase connection (X10) (present only on some 3-phase units) ..... 4-9
Table 4-7. AC auxiliary power input (X4) ..... 4-9
Table 4-8. 13-pin analog I/O connector (X2) ..... 4-9
Table 4-9. 13-pin multi I/O connector (X22) ..... 4-10
Table 4-10. Relay K1 connector (X3) ..... 4-10
Table 4-11. Fan connector (X7) ..... 4-11
Table 4-12. Multi I/O functions ..... 4-11
Table 4-13. Multi I/O ports ..... 4-12
Table 4-14. Fault table ..... 4-16
Table 4-15. Status table ..... 4-17
Table 4-16. Monitoring table ..... 4-17
Table 4-17. Menu structure ..... 4-22
Table 5-1. Terminal screw size ..... 5-25
Table 5-2. Terminal screw torque ..... 5-25
Table 5-3. Control modes ..... 5-39
Table 5-4. Response to load changes ..... 5-40
Table 5-5. Thyro-AX 1A, 2A, and 3A, load with separate star point without neutral conductor ..... 5-43
Table 5-6. Thyro-AX 2A and 3A load with common star point without neutral conductor ..... 5-44
Table 5-7. Thyro-AX 2A and 3A load in delta connection ..... 5-44
Table 5-8. Thyro-AX 3A load with common star point with neutral conductor / open delta connection ..... 5-44
Table 6-1. Using the touch display for troubleshooting ..... 6-2

# List of Figures

Figure 3-1. Current derating ..... 3-7
Figure 4-1. Total setpoint ..... 4-1
Figure 4-2. USB cable ..... 4-7
Figure 4-3. Front I/O connectors ..... 4-8
Figure 4-4. Top connectors ..... 4-8
Figure 4-5. Bottom connectors ..... 4-9
Figure 4-6. Digital setpoint 2 switches ..... 4-13
Figure 4-7. Touch display ..... 4-14
Figure 4-8. Navigation ..... 4-15
Figure 4-9. Numerical entry ..... 4-15
Figure 4-10. Actual value ..... 4-16
Figure 4-11. Events screen ..... 4-16
Figure 4-12. EasyStart ..... 4-18
Figure 4-13. EasyStart ..... 4-19
Figure 4-14. EasyStart identification code ..... 4-20
Figure 4-15. Restriction codes ..... 4-20
Figure 4-16. Connection to local installed server ..... 4-24
Figure 4-17. Several open tabs ..... 4-25
Figure 4-18. Status message ..... 4-25
Figure 4-19. Separate status message window ..... 4-25
Figure 4-20. Separate tab ..... 4-26
Figure 4-21. Save or restore layout ..... 4-27
Figure 4-22. Open .thyro files in file explorer ..... 4-28
Figure 4-23. Change name of device ..... 4-29
Figure 4-24. Parameter transfer ..... 4-29
Figure 4-25. Drop-down menu parameter ..... 4-30
Figure 4-26. Numeric-field parameter ..... 4-30
Figure 4-27. Check-box parameter ..... 4-30
Figure 5-1. Thyro-AX 1A 16 H ..... 5-2
Figure 5-2. Thyro-AX 1A 30 H ..... 5-2
Figure 5-3. Thyro-AX 1A 45 H, 60 H ..... 5-3
Figure 5-4. Thyro-AX 1A 100 H ..... 5-3
Figure 5-5. Thyro-AX 1A 130 H, 170 H ..... 5-4
Figure 5-6. Thyro-AX 1A 230 HF, 240 HF, 280 HF, 350 HF ..... 5-5
Figure 5-7. Thyro-AX 1A 1000 HF ..... 5-6
Figure 5-8. Thyro-AX 1A 1400 HF, 1500 HF ..... 5-7
Figure 5-9. Thyro-AX 2A 16 H ..... 5-7
Figure 5-10. Thyro-AX 2A 30 H ..... 5-8
Figure 5-11. Thyro-AX 2A 45 H, 60 H ..... 5-8
Figure 5-12. Thyro-AX 2A 100 H ..... 5-9
Figure 5-13. Thyro-AX 2A 130 H, 170 H ..... 5-10
Figure 5-14. Thyro-AX 2A 230 HF, 240 HF, 280 HF, 350 HF ..... 5-11
Figure 5-15. Thyro-AX 2A 1000 HF ..... 5-12
Figure 5-16. Thyro-AX 2A 1400 HF, 1500 HF ..... 5-13
Figure 5-17. Thyro-AX 3A 16 H ..... 5-14

Figure 5-18. Thyro-AX 3A 30 H ..... 5-14
Figure 5-19. Thyro-AX 3A 45 H, 60 H ..... 5-15
Figure 5-20. Thyro-AX 3A 100 H ..... 5-16
Figure 5-21. Thyro-AX 3A 130 H, 170 H ..... 5-17
Figure 5-22. Thyro-AX 3A 230 HF, 240 HF, 280 HF, 350 HF ..... 5-18
Figure 5-23. Thyro-AX 3A 1000 HF, ..... 5-19
Figure 5-24. Thyro-AX 3A 1400 HF, 1500 HF ..... 5-20
Figure 5-25. Load configuration ..... 5-26
Figure 5-26. IP 20 protection, 45 A through 100 A ..... 5-27
Figure 5-27. IP20 protection, 130 A through 350 A ..... 5-28
Figure 5-28. IP20 protection, 1000 A through 1500 A ..... 5-29
Figure 5-29. 1A power controller connections ..... 5-30
Figure 5-30. 2A power controller connections ..... 5-31
Figure 5-31. 3A power controller connections with load in delta or star without N ..... 5-32
Figure 5-32. 3A power controller connections with load in star with N ..... 5-33
Figure 5-33. 3A power controller connections with load in open delta ..... 5-34
Figure 5-34. TAKT waveform ..... 5-36
Figure 5-35. VAR waveform ..... 5-36
Figure 5-36. QTM waveform ..... 5-36
Figure 5-37. Setpoint ..... 5-38
Figure 5-38. U control ..... 5-39
Figure 5-39. I control ..... 5-40
Figure 5-40. P control ..... 5-40
Figure 5-41. Software synchronization ..... 5-47
Figure 5-42. Basic Bus Module ..... 5-47

# Safety and Product Compliance Guidelines

## IMPORTANT SAFETY INFORMATION

To ensure safe installation and operation of the Advanced Energy Thyro-AX unit, read and understand this manual before attempting to install and operate this unit. At a minimum, read and follow the safety guidelines, instructions, and practices.

## DANGER, WARNING, AND CAUTION BOXES

This symbol represents important notes concerning potential harm to people, this unit, or associated equipment. Advanced Energy includes this symbol in danger, warning, and caution boxes to identify specific levels of hazard seriousness.

**DANGER:**

DANGER indicates an imminently hazardous situation that, if not avoided, will result in death or serious injury. DANGER is limited to the most extreme situations.

**DANGER:**

DANGER indique une situation dangereuse imminente qui, si elle n'est pas évitée, pourrait provoquer la mort ou des blessures graves. DANGER est réservé aux situations les plus extrêmes.

**WARNING:**

WARNING indicates a potentially hazardous situation that, if not avoided, could result in death or serious injury, and/or property damage.

**AVERTISSEMENT:**

AVERTISSEMENT indique une situation potentiellement dangereuse qui, si elle n'est pas évitée, pourrait provoquer la mort ou des blessures graves et/ou des dommages matériels.

**CAUTION:**

CAUTION indicates a potentially hazardous situation that, if not avoided, could result in minor or moderate injury, and/or property damage. CAUTION is also used for property-damage-only accidents.

**ATTENTION:**

ATTENTION indique une situation potentiellement dangereuse qui, si elle n'est pas évitée, pourrait provoquer des blessures mineures ou modérées et/ou des dommages matériels. ATTENTION est également utilisé pour des accidents causant uniquement des dommages matériels.

# SAFETY GUIDELINES

Review the following information before attempting to install and operate the product.

## Rules for Safe Installation and Operation

Please note the following rules:

- Do not attempt to install or operate this equipment without proper training.
- Ensure that this unit is properly grounded.
- Ensure that all cables are properly connected.
- Verify that input voltage and current capacity are within specifications before turning on the unit.
- Use proper electrostatic discharge (ESD) and lockout/tagout precautions.
- Maintenance and service must be performed only by AE-trained service personnel.

# INTERPRETING PRODUCT LABELS

The following labels might appear on your unit:

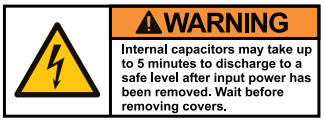


Capacitor discharge warning (5 minutes)

| | |
|---|---|
| or | CE label<br>Complies with applicable European directives. |
| | Protective conductor terminal<br>This terminal must be connected first and be of proper type and size for the circuit with the highest voltage and current carrying capacity. Note that other connections might have higher requirements than that of the mains connection. |
| | On or off |
| or | Phase |
| | Power on/standby |
| WARNING<br>HAZARDOUS VOLTAGE<br>Risk of death or bodily injury. Disconnect all sources of input power before working on this unit or anything connected to it. | Hazardous voltage |
| | Hazardous voltage<br>Voltage > 30 $V_{RMS}$, 42.4 V peak, or 60 VDC |
| | Hot surface |
| ATTENTION<br>There are no user-serviceable parts or adjustments inside.<br>DO NOT REMOVE COVER | No user-serviceable parts |
| RoHS COMPLIANT | European Union RoHS compliant |

| | |
|---|---|
| | Refer to manual for more information |
| | Short-circuit protected |
| | Environmentally Friendly Use Period of 25 years per China RoHS—recycle responsibly at end of life |
| | Electrocution hazard |
| | Heavy object—can cause muscle strain or back injury |
| | Heavy object—do not lift manually |
| | Electrical fuse |
| | Alternating current |
| | Direct current |
| | UL® Listed to Canadian and United States safety standards |
| | UL Listed to United States safety standards |
| | UL Recognized to Canadian and United States safety standards |
| | UL Recognized to United States safety standards |

# PRODUCT COMPLIANCE

The following sections include information about unit compliance and certification, including the conditions of use required to be in compliance with the standards and directives.

## Product Certification

Certain options of this product may be certified according to the list below.

For more information, refer to the Certificate or Letter of Conformity (US) or Declaration of Conformity (EU), available on request.

- CE Marking – Self-declaration, assessed by AE Corporate Compliance
- EMC measurements – Verified by AE Corporate Compliance
- UL registration file E135074 according to UL 508

## Safety and EMC Directives and Standards

For information concerning compliance to applicable EU requirements, refer to the EU Declaration of Conformity for this unit. The Declaration of Conformity might also include a supplementary section covering compliance to non-EU regulatory requirements and/or industry standards or guidelines.

## Conditions of Use

To comply with the stated directives and standards, you must meet the following conditions of use:

- Before making any other connection to this product, connect the primary Protective Earth (ground), and secondary Protective Earth (ground) if applicable, to a local earth ground using wire that is sized according to the applicable requirements.
- Install and operate this unit in an overvoltage category according to environmental specifications.
- You must install and operate this device with a circuit breaker switch on the AC input. The circuit breaker switch must be easily accessible and near the unit. The breaker must be marked as the disconnecting device for the equipment.
- Use only a shielded cable for communications and/or control connections.
- Limit the system load current to the maximum specified level for the unit.
- Dispose of this product as directed by applicable laws and regulations.
- For the input and output power connections, use wires that are suitable for at least 75°C (167°F).
- Do not allow condensation of any liquids or accumulation of conductive dust on the instrument. Doing so will have unpredictable results, possibly including, but not limited to, loss of accuracy.

# UL Markings and Requirements

To use the unit under UL conditions, you must comply with the following additional conditions of use:

- Make electrical connections following the specified tightening torque. See "Connecting Load and Auxiliary Power" on page 5-23.
- Use 60°C or 60°C/75°C copper conductors.
- The maximum surrounding air temperature under UL conditions is 40°C (104°F).
- The unit is suitable for use on a circuit capable of delivering not more than 100 kA rms symmetrical amperes, xxx volts maximum, when protected by RK5 class fuses, where xxx is the maximum rated voltage of the unit.
- Branch circuit protection must be provided and sized according to National Electrical Code and any additional local codes.
- The unit is suitable for use in Pollution Degree 2 environment.

# Environmental Compliance

- **EU RoHS – European Union Directive 2011/65/EU (RoHS 2)**

  Restriction of the Use of Certain Hazardous Substances in Electrical and Electronic Equipment

  This product is EU RoHS 2 compliant, designed to contain no more than the maximum concentration of hazardous substances listed in Annex II, with possible exemptions from Annex III or IV. Because this product is installed as a component in a large-scale fixed installation or stationary industrial tool: the product is outside the scope of this Directive, compliance is not required, and the EU RoHS Directive is not declared on the CE Declaration of Conformity.

- **EU REACH – European Union Regulation (EC) No. 1907/2006**

  Registration, Evaluation, Authorization and Restriction of Chemicals

  Advanced Energy manufactures articles subject to Article 33 of REACH and, upon request, will provide information regarding Substances of Very High Concern (SVHC) currently identified by the European Chemical Agency (ECHA) that are contained in this product, at concentrations greater than 0.1% by weight.

- **China RoHS - People's Republic of China (PRC) Ministry of Industry and Information Technology (MIIT) Order #32 (China RoHS 2)**

  Management Methods for the Restriction of the Use of Hazardous Substances Electrical and Electronic Products

  This product contains hazardous substances listed in PRC Standard GB/T 26572, above the maximum concentration limits stipulated. In compliance to

PRC Standard SJ/T 11364, AE provides a disclosure of hazardous substance content and this product is marked with an Environmentally Friendly Use Period (EFUP) of 25 years.

# INTERLOCKS AND LIMITING CONDITIONS

**WARNING:**

**Advanced Energy products only include interlocks when required by product specification. Interlocks in Advanced Energy products are not intended to meet or satisfy safety requirements. Where interlocks exist, you must still meet and satisfy safety requirements. The presence of interlocks does not imply operator protection.**

**AVERTISSEMENT:**

**Les produits Advanced Energy comprennent des dispositifs de verrouillage uniquement si la spécification du produit l'exige. Les dispositifs de verrouillage d'Advanced Energy ne sont pas destinés à satisfaire aux normes de sécurité ni à s'y conformer. Lorsqu'un système comprend un dispositif de verrouillage, vous demeurez responsable de satisfaire aux normes de sécurité et de vous y conformer. La présence d'un dispositif de verrouillage n'implique pas la protection de l'opérateur.**

*Table 1-1. Interlocks and limiting conditions*

| Mechanism | Detection Method | Equipment Condition When Interlock is Open |
|---|---|---|
| By opening the *PULSE LOCK* jumper the unit is locked. | Opening the *PULSE LOCK* jumper or external interlock circuit<br>Terminal X2.1 connected to terminal X2.2 | The touch display turns red. The output is disabled. |

The interlock jumper can be removed and replaced with an external interlock circuit capable of switching 24 V, 20 mA.

# Product Overview

## GENERAL DESCRIPTION

The Thyro-AX power controller is a communication-capable thyristor power controller. It can be used wherever alternating voltages, alternating currents or outputs in thermal process technology need to be controlled. The Thyro-AX power controller has several different control and regulation modes, can easily be connected to process and automation technology, has a high degree of control accuracy and is simple to handle.

## UNIT FEATURES

The Thyro-AX unit offers several features for improved handling and operation:

- Integrated semiconductor fuse
- Type range 230 VAC to 600 VAC, 16 A to 1500 A, 1-phase, 2-phase, and 3-phase
- Load voltage from 24 VAC
- Touch display capable of full graphics
- Auxiliary power supply input range 85 VAC to 265 VAC
- Load with high $R_{warm}$ /$R_{cold}$ ($\leq 6$), peak current limitation of 3 x $I_{nom}$
- Resistive load and transformer load in operating mode VAR
- Soft start function for transformer load
- Channel separation, necessary with countervoltage
- Control modes U, $U^2$, I, $I^2$, P
- Operating modes TAKT, VAR, SWITCH
- Operating mode QTM (with Thyro-AX 1A)
- Synchronization option
  - For TAKT with optional Thyro--Power Manager
  - For QTM with internal mains load optimization
- Control with analog setpoint, via PC using optional Thyro-Tool Pro software, or with an optional bus module
- Data logger

- Operating hours counter
- Energy counter
- Internal/external measuring transformer
- USB system interface
- Safe isolation in accordance with EN 62477-1
- Fuse monitoring
- Load current monitoring
- Five multi-I/Os
- Signaling relay
- Three analog outputs
- UL approval for standard devices (16 A to 350 A)

Options include:

- Thyro-Tool Pro computer user interface
- Bus connection via bus adapters for:
  - PROFIBUS
  - PROFINET
  - Ethernet/IP™
  - Modbus® TCP
  - Modbus RTU
  - DeviceNet®
  - CANopen®
  - Other bus systems on request

# Specifications

## PHYSICAL SPECIFICATIONS

*Table 3-1. Physical specifications*

| Description | Specification |
|---|---|
| **General Physical Specifications** | |
| Size | See Table 3-2 |
| Weight | |
| **Mounting** | |
| Mechanical | Mounting hardware not included |
| **Connectors** | |
| AC phase connection (**X1**) | Included 2-pin plug-in screw terminal block, 0.2 $mm^2$ - 2.5 $mm^2$ (24 AWG - 12 AWG) |
| Analog I/O (**X2**) | Included 13-pin, plug-in, screw terminal block, 0.14 $mm^2$ - 1.5 $mm^2$ (30 AWG - 14 AWG) |
| Relay K1 (**X3**) | Included 3-pin, plug-in, screw terminal block, 0.14 $mm^2$ - 1.5 $mm^2$ (30 AWG - 14 AWG) |
| 240 V AC auxiliary power input (**X4**) | Included 4-pin, plug-in, screw terminal block, 0.14 $mm^2$ - 1.5 $mm^2$ (30 AWG - 14 AWG) |
| USB (**X6**) | USB (cable not included) |
| Ethernet (**X6**) | Ethernet (cable not included) |
| Bus module, multi I/O (**X22**) | Included 13-pin, plug-in, screw terminal block, 0.14 $mm^2$ - 1.5 $mm^2$ (30 AWG - 14 AWG) |
| Degree of protection | IP20 |

*Table 3-2. Type Range 230 V, 400 V, 500 V, 600 V*

| Model Type Current (A) | Dimensions (WxHxD) mm (in) | | | Weight kG (lb) | Dimensional Drawing |
|---|---|---|---|---|---|
| **Thyro-AX 1A** | | | | | |
| 8, 16, 30 | 45 (1.76) | 136 (5.35) | 129 (5.08) | 0.7 (1.5) | Figure 5-1 |

*Table 3-2. Type Range 230 V, 400 V, 500 V, 600 V (Continued)*

| Model Type Current (A) | Dimensions (WxHxD) mm (in) | | | Weight kG (lb) | Dimensional Drawing |
|---|---|---|---|---|---|
| 45, 60 | 52 (2.0) | 203 (8.0) | 184 (7.3) | 1.7 (3.7) | Figure 5-2 |
| 100 | 75 (3.0) | 203 (8.0) | 193 (7.6) | 1.7 (3.7) | Figure 5-3 |
| 130, 170 | 125 (4.9) | 320 (12.6) | 241 (9.5) | 4 (8.8) | Figure 5-4 |
| 280 | 125 (4.9) | 370 (14.6) | 241 (9.5) | 5 (11.0) | Figure 5-5 |
| 350 | 125 (4.9) | 400 (15.8) | 261 (10.3) | 8.4 (18.5) | Figure 5-6 |
| 1000 | 239 (9.4) | 729 (28.7) | 516 (20.3) | 35 (77.2) | Figure 5-7 |
| 1400, 1500 | 239 (9.4) | 729 (28.7) | 516 (20.3) | 35 (77.2) | Figure 5-8 |
| **Thyro-AX 2A** | | | | | |
| 8, 16, 30 | 89 (3.5) | 136 (5.4) | 129 (5.1) | 1.4 (3.1) | Figure 5-9 |
| 45, 60 | 104 (4.1) | 136 (5.4) | 184 (7.3) | 3.4 (7.5) | Figure 5-10 |
| 100 | 150 (5.9) | 203 (8.0) | 193 (7.6) | 3.8 (8.4) | Figure 5-11 |
| 130, 170 | 250 (9.8) | 320 (12.6) | 241 (9.5) | 8 (17.6) | Figure 5-12 |
| 280 | 250 (9.8) | 393 (15.5) | 241 (9.5) | 11 (24.3) | Figure 5-13 |
| 350 | 250 (9.8) | 430 (16.9) | 261 (10.3) | 16.7 (36.8) | Figure 5-14 |
| 1000 | 417 (16.4) | 685 (27.0) | 516 (20.3) | 54 (119.0) | Figure 5-15 |
| 1400, 1500 | 417 (16.4) | 685 (27.0) | 516 (20.3) | 54 (119.0) | Figure 5-16 |
| **Thyro-AX 3A** | | | | | |
| 8, 16, 30 | 135 (5.3) | 136 (5.4) | 129 (5.1) | 2.1 (4.6) | Figure 5-17 |
| 45, 60 | 156 (6.1) | 203 (8.0) | 184 (7.3) | 5.1 (11.2) | Figure 5-18 |
| 100 | 225 (8.9) | 203 (8.0) | 193 (7.6) | 5.7 (12.5) | Figure 5-19 |
| 130, 170 | 375 (14.8) | 320 (12.6) | 241 (9.5) | 12 (26.5) | Figure 5-20 |
| 280 | 375 (14.8) | 393 (15.5) | 241 (9.5) | 15 (33.1) | Figure 5-21 |
| 350 | 375 (14.8) | 430 (16.9) | 261 (10.3) | 25.5 (56.2) | Figure 5-22 |
| 1000 | 583 (23.0) | 685 (27.0) | 516 (20.3) | 74 (163.1) | Figure 5-23 |
| 1400, 1500 | 583 (23.0) | 685 (27.0) | 516 (20.3) | 74 (163.1) | Figure 5-24 |

In UL applications use 60°C or 60°C/75°C copper conductors.

*Table 3-3. Terminal size*

| Type Current | AC Connection Screw Size | Ground Screw Size | Conductor Area | Wire Gauge |
|---|---|---|---|---|
| 16 A | Lug or M4 | Lug or M4 | 6 $mm^2$ | 10 AWG |
| 45 A | M6 | M6 maximum | 50 $mm^2$ | 0 (1/0) AWG |

*Table 3-3. Terminal size (Continued)*

| Type Current | AC Connection Screw Size | Ground Screw Size | Conductor Area | Wire Gauge |
|---|---|---|---|---|
| 60 A, 100 A | M6 | M6 maximum | 50 $mm^2$ | 0 (1/0) AWG |
| 130 A, 170 A | M8 | M10 | 95/120 $mm^2$ | 0000 (4/0) AWG |
| 280 A | M10 | M10 | 150/185 $mm^2$ | |
| 350 A | M10 | M10 | 185 $mm^2$ | |
| 1000 A | M12 | M12 | Cu 60x10<br>Two 14 mm holes | |
| 1400 A | M12 | M12 | Cu 60x10<br>Two 14 mm holes | |
| 1500 A | M12 | M12 | Cu 60x10<br>Two 14 mm holes | |

# ELECTRICAL SPECIFICATIONS

*Table 3-4. Electrical specifications*

| Description | Specification |
|---|---|
| **Electrical Requirements** | |
| AC input voltage | 24 V to 230 V, 24 V to 400 V, 24 V to 500 V, 24 V to 600 V +10% |
| Auxiliary power supply input | 85 VAC to 265 VAC<br>(10 W per device/27 VA/not grounded) |
| Fan input voltage (type designation F) | 230 V, 50/60 Hz, 115 V fans are available by special order for some units. For fan current and current derating see "Cooling Specifications" on page 3-7 |
| AC line frequency | 50/60 Hz nominal; 47 Hz to 63 Hz range |
| AC current | See Table 3-6 |
| Rated power | |
| Dissipation | |
| Semiconductor fuse | |
| Ground connection | Chassis ground near AC connector suitable for ring lug connection |
| Load description | Resistive load (minimum 100 W)<br>Resistive load $R_{warm}/R_{cold}$ ratio up to 6<br>Transformer load |
| External transformer | The induction of the load side transformer should not exceed 1.45T in case of mains overvoltage when using grain-oriented, cold-rolled plates. This corresponds to a nominal induction of approximately 1.3T. |
| Setpoint inputs | 0(4) mA - 20 mA Ri = 250 Ω / max 24 mA. Max open-circuit voltage = 24 V<br>0(1) V - 5 V Ri = 14.7 kΩ / max 12 V<br>0(2) V - 10 V Ri = 11 kΩ / max 12 V |
| Analog outputs | Signal level 0 V - 10 V, 0 mA - 20 mA or 4 mA - 20 mA. The maximum burden voltage is 10 V. |
| Precision | U-control: Better than ± 1.5% (only valid from –15% to +10% of the type voltage)<br>I-Control: ± 1.5%<br>All specifications are relating to the respective final value. |
| Limitations | Voltage limitation $U_{rms}$ |

*Table 3-4. Electrical specifications (Continued)*

| Description | Specification |
|---|---|
| | Current limitation $I^{rms}$ = default setting<br>Effective power limitation P<br>Peak current limitation |
| Relay | Changeover operation<br>Contact material: AgSnO2/Au coated<br>The relay can be used for low load circuits (> 5 V, 20 mA), but not if it has been preloaded with 230 V~.<br>Maximum values: 250 V, 4 A, 180 W, 1500 VA |

*Table 3-5. Voltage range*

| Type Voltage | Range | Voltage Range |
|---|---|---|
| **Thyro-AX HRLP2 With External 85 VAC to 265 VAC Auxiliary Power Supply** | | |
| 230 V | –89% to +10% | 24 V < U mains ≤ 253 V |
| 400 V | –94% to +10% | 24 V < U mains ≤ 440 V |
| 500 V | –95% to +10% | 24 V < U mains ≤ 550 V |
| 600 V | –96% to +10% | 24 V < U mains ≤ 660 V |

*Table 3-6. Model-specific specifications*

| Current (A) | Type Power (kW) | | | | Dissipation (W) | Fuse (A) |
|---|---|---|---|---|---|---|
| | 230 V | 400 V | 500 V | 600 V | | |
| **Thyro-AX 1A ... HRLP2** | | | | | | |
| 8 | 3.2 | 3.2 | 4 | | 9 | 10 |
| 16 | 3.7 | 6.4 | 8 | | 30 | 20 |
| 30 | 6.9 | 12 | 15 | | 47 | 40 |
| 45 | 10 | 18 | 22.5 | | 52 | 63 |
| 60 | 14 | 24 | 30 | | 80 | 80 |
| 100 | 23 | 40 | 50 | | 105 | 200 |
| 130 | 30 | 52 | 65 | | 150 | 200 |
| 170 | 39 | 68 | 85 | | 210 | 315 |
| 280 | 64 | 112 | 140 | | 330 | 350 |
| 350 | 80 | 140 | 175 | | 390 | 500 |
| 1000 | | 400 | 500 | 600 | 1396 | 2x1000 |
| 1400 | | | 700 | 840 | 1715 | 4x900 |

*Table 3-6. Model-specific specifications (Continued)*

| Current (A) | Type Power (kW) | | | | Dissipation (W) | Fuse (A) |
|---|---|---|---|---|---|---|
| | 230 V | 400 V | 500 V | 600 V | | |
| 1500 | | 600 | | | 1755 | 4x900 |
| **Thyro-AX 2A ... HRLP2** | | | | | | |
| 8 | | 6 | 7 | | 18 | 10 |
| 16 | | 11 | 14 | | 60 | 20 |
| 30 | | 21 | 26 | | 94 | 40 |
| 45 | | 31 | 39 | | 96 | 63 |
| 60 | | 42 | 52 | | 160 | 80 |
| 100 | | 69 | 87 | | 210 | 200 |
| 130 | | 90 | 112 | | 300 | 200 |
| 170 | | 118 | 147 | | 420 | 315 |
| 280 | | 194 | 242 | | 660 | 350 |
| 350 | | 242 | 303 | | 780 | 500 |
| 1000 | | 693 | 866 | 1039 | 2811 | 2x1000 |
| 1400 | | | 1212 | 1454 | 3451 | 4x900 |
| 1500 | | 1039 | | | 3510 | 4x900 |
| **Thyro-AX 3A ... HRLP2** | | | | | | |
| 8 | | 6 | 7 | | 27 | 10 |
| 16 | | 11 | 14 | | 90 | 20 |
| 30 | | 21 | 26 | | 141 | 40 |
| 45 | | 31 | 39 | | 144 | 63 |
| 60 | | 42 | 52 | | 240 | 80 |
| 100 | | 69 | 87 | | 315 | 200 |
| 130 | | 90 | 112 | | 450 | 200 |
| 170 | | 118 | 147 | | 630 | 315 |
| 280 | | 194 | 242 | | 990 | 350 |
| 350 | | 242 | 303 | | 1170 | 500 |
| 1000 | | 693 | 866 | 1039 | 4127 | 2x1000 |
| 1400 | | | 1212 | 1454 | 5086 | 4x900 |
| 1500 | | 1039 | | | 5206 | 4x900 |

# COOLING SPECIFICATIONS

Type H Thyro-AX power controllers are self cooled, while type HF units are force cooled. The fan in HF units require a separate power source at 230 V, 50/60 Hz. A 115 V fan is available by special-order for some units.

*Table 3-7. Current derating*

| Air Temperature | $I/I_{RATED\ CURRENT}$ (A) | |
|---|---|---|
| | Self Cooling | Forced Cooling |
| 0°C to +25°C (32°F to 77°F) | 1.10 | 1.10 |
| 30°C (86°F) | 1.10 | 1.05 |
| 35°C (95°F) | 1.10 | 1.00 |
| 40°C (104°F) | 1.05 | 0.96 |
| 45°C (113°F) | 1.00 | 0.91 |
| 50°C (122°F) | 0.95 | 0.87 |
| 55°C (131°F) | 0.88 | 0.81 |
| UL applications limited to +40°C (104°F) | | |

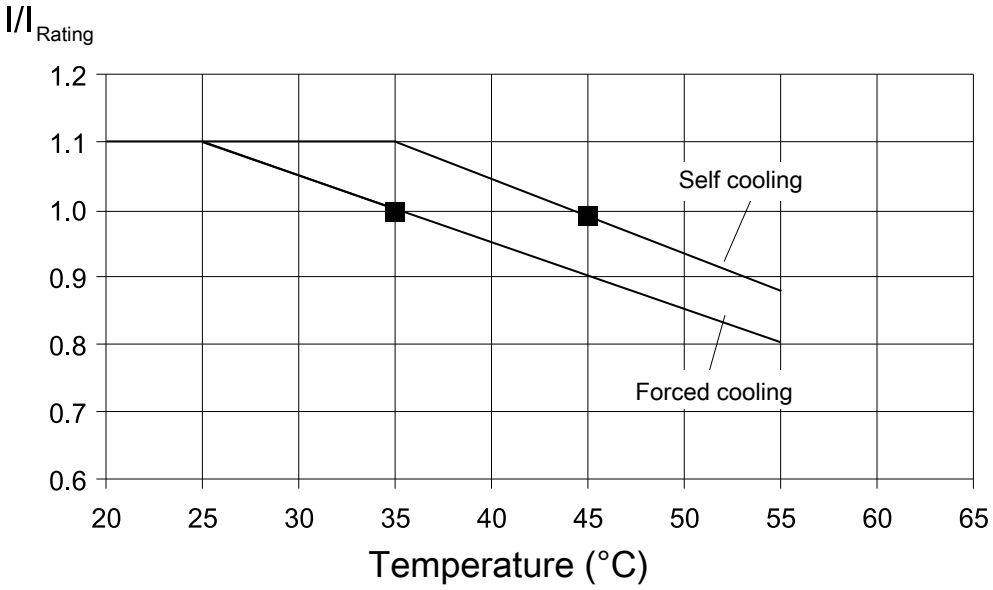


*Figure 3-1. Current derating*

*Table 3-8. Fan current, air volume, and sound pressure*

| Model | Current (A) [1] | | Air Volume ($m^3/h$) | Sound Pressure (dbA @ 1 m) |
|---|---|---|---|---|
| | 50 Hz | 60 Hz | | |
| **1A** | | | | |
| 280 F, 350 F | 0.22 | 0.22 | 120 | 67 |
| **2A** | | | | |
| 280 F, 350 F | 0.5 | 0.38 | 200 | 70 |
| **3A** | | | | |
| 280 F, 350 F | 0.5 | 0.38 | 260 | 70 |
| [1] For 230 V fans. | | | | |

# ENVIRONMENTAL SPECIFICATIONS

The two following tables describe the environmental specifications for the Thyro-AX unit.

*Table 3-9. Environmental standard specifications*

| Description | Specification |
|---|---|
| Overvoltage | Category III per IEC 62477-1 |
| Pollution degree | 2 |

*Table 3-10. Climatic specifications*

| | Temperature | Relative Humidity | Air Pressure |
|---|---|---|---|
| **Operating** | Self cooled models:<br>+0°C to +45°C<br>+32°F to +113°F<br>Force cooled models:<br>+0°C to +35°C<br>+32°F to +95°F | 5% to 85% [1]<br>1 $g/m^3$ to 25 $g/m^3$<br>1 $g/m^3$ to 25 $g/m^3$ | 78.8 kPa to 106 kPa<br>788 mbar to 1060 mbar<br>Equivalent altitude: +2000 m to -500 m (+6562′ to -1640′) |
| **Storage** | -25°C to +55°C<br>-13°F to +131°F | 5% to 95%<br>1 $g/m^3$ to 29 $g/m^3$ | 78.8 kPa to 106 kPa<br>788 mbar to 1060 mbar<br>Equivalent altitude: +2000 m to -500 m (+6562′ to -1640′) |

*Table 3-10. Climatic specifications (Continued)*

| | Temperature | Relative Humidity | Air Pressure |
|---|---|---|---|
| **Transportation** | -25°C to +70°C<br>-13°F to +158°F | 95% [2]<br>60 g/m³ [3] | 65.6 kPa to 106 kPa<br>656 mbar to 1060 mbar<br>Equivalent altitude: +3500 m to -500 m (+11480′ to -1640′) |

[1] Non-condensing, no formation of ice

[2] Maximum relative humidity when the unit temperature slowly increases, or when the unit temperature directly increases from -25°C to +30°C (-13°F to +86°F)

[3] Maximum absolute humidity when the unit temperature directly decreases from +70°C to +15°C (+158°F to +59°F)

# TYPE DESIGNATION

## Validity

These operating instructions comply with the current technical specifications of the device at the time of publication. The contents do not constitute a subject matter of the contract, but serve for information purposes only.

AE reserves the right to alter any specifications given in this manual, especially with regard to technical data, operation, weights, and dimensions. Advanced Energy reserves the right to make modifications with regard to the content and technical data in these operating instructions.

## Type Code

The type designation of the thyristor-power controller is derived from the configuration of the power unit as well as from other features.

**Thyro-AX 1A**

Thyristor controller with 1-phase power unit, suited for 1-phase loads in operating modes TAKT, VAR, and QTM.

**Thyro-AX 2A**

Thyristor controller with 2-phase power unit, suited for symmetrical loads in 3-phase operation in 3-phase economical circuit in operating mode TAKT. The unit calculates the values of load current on phase L2, based on the measured values of phase L1 and L3.

**Thyro-AX 3A**

Thyristor controller with 3-phase power unit, suited for 3-phase loads in operating modes TAKT and VAR.

*Table 3-11. Type designation*

| Type range | Designation | Features |
|---|---|---|
| Thyro-AX | 1A | 1-phase power section, for 1-phase operation |
| | 2A | 2-phase power section used with a 3-phase load in 3-phase economic circuit (not for phase-angle firing VAR) |
| | 3A | 3-phase power section, for 3-phase operation |
| | ... 400- | With 400 V type voltage |
| | ... 280 | With 280 A type current |
| | H | With integrated semiconductor fuse |
| | F | With fan |
| | W | With water cooling |
| | R | With signaling relay |
| | L | With load monitoring |
| | P | With power measurement and control |
| | 2 | Thyro-AX series |

**Thyro-AX ... HRLP2**

Thyristor power controller with integrated semiconductor fuse, system bus interface, fully graphically capable touch display, 85 VAC to 265 VAC auxiliary power supply input, signaling relay, load current monitoring and analog output, channel separation, with the operating modes TAKT, VAR, QTM and SWITCH, synchronization option for mains load optimization, and control modes U, $U^2$, I, $I^2$, and P. Suitable for visualization and commissioning software using the Thyro-Tool Pro software.

# Communication Controls

## CONTROLS AND INDICATORS

The unit can be configured using either the touch display, or via the Thyro-Tool Pro software.

The setpoint control characteristics of the Thyro-AX power controller can be easily adapted for the control output signal of the upstream process controller or automation system. The adaptation is made by changing the starting and ending points of the control characteristic. Inverted operation (ending value is smaller than the starting value in voltage or current) is also possible.

- Setpoint 1: Analog signal (X2.4 to X2.3 ground) 0 mA to 20 mA default, configurable as 4 mA to 20 mA, 0(1) V to 5 V, or 0(2) V to 10 V
- Setpoint 2: Analog signal (X2.11 to X2.3 ground) 0 V to 5 V default, configurable as 1 V to 5 V, 0 mA to 20 mA, 4 mA to 20 mA, or 0(2) V to 10 V
- Setpoint 3: Digital signal from PC via either USB or the optional bus interface
- Setpoint 4: Digital signal setpoint from digital potentiometer of the touch display

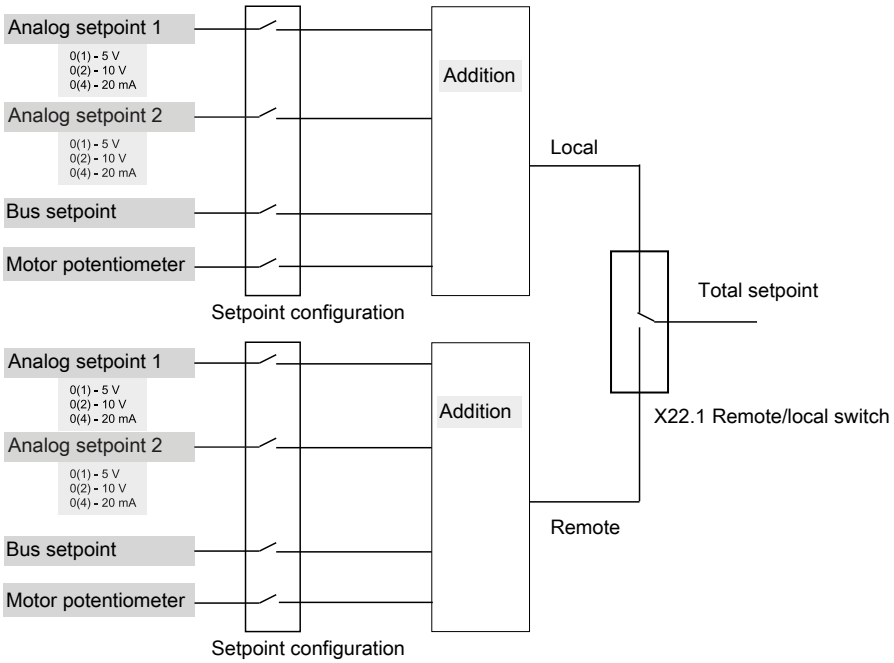


*Figure 4-1. Total setpoint*

The setpoint input is selected by configuring terminal X22.1. The remote setpoint is selected when X22.1 is grounded, the local setpoint is selected when X22.1 is ungrounded.

# Status Indicators

## ANALOG OUTPUTS

The following variables are indicated at the analog output when connecting an external measurement instrument:

- Load voltage (highest conductor voltage)
- Load current (highest phase current from L1, L2, L3)
- Effective power (overall power)

You can configure the analog outputs to indicate the value of other variables using the touch display or the Thyro-Tool Pro software.

*Table 4-1. Analog output default settings*

| Analog Output | Output Variable |
|---|---|
| Analog Output 1 | Load voltage |
| Analog Output 2 | Load current |
| Analog Output 3 | Power on the load |

## FAULT, STATUS, AND LIMIT INDICATORS

Errors and faults are indicated by the fault and limit relay, the touch display, the Thyro-Tool Pro software, and the optional bus interface.

The unit signals faults in the power controller or load circuit via the touch display and fault relay K1. To identify the location of the fault, select the status line, and then read the fault log via the touch display, the Thyro-Tool Pro software, or the bus interface.

Simultaneously with the fault signal, you can use the **Pulse Lock On/Off** (with acknowledgement), **Pulse Lock On/Off** (without acknowledgement), or **Regulator Lock On/Off** (without acknowledgement) configuration to require that a pulse shutdown occur.

☞ **Important**
This manual describes the default configuration. Though these functions are fully configurable, AE recommends not changing the default configuration.

*Table 4-2. Fault Messages*

| Fault Description | Software Message | Display Message | Display Red | Relay | Pulse Inhibit | Data Logger |
|---|---|---|---|---|---|---|
| Network sync error | **SYNC ERROR** | **SYNC ERROR** | X | X | X [1] | X |
| Hardware error | **HARDWARE FAULT** | **HW FAULT** | X | X | X [1] | X |
| Hardware error | **HARDWARE FAULT** | **HW FAULT** | X | X | X [1] | X |
| Minimum frequency | **FREQUENCY TO LOW** | **FMIN** | X | X | X [1] | X |
| Maximum frequency | **FREQUENCY TO HIGH** | **FMAX** | X | X | X [1] | X |
| Valid frequency tolerance | **FREQUENCY TOLERANCE EXCEEDED** | **FTOLERANCE** | X | X | X [1] | X |
| Left rotating field | **NO ROTATING FIELD** | **NO ROTFIELD** | X | X | X [1] | X |
| Phase L1 is missing | **PHASE L1 MISSING** | **NO PHASE1** | X | X | X [1] | X |
| Phase L2 is missing | **PHASE L2 MISSING** | **NO PHASE2** | X | X | X [1] | X |
| Phase L3 is missing | **PHASE L3 MISSING** | **NO PHASE3** | X | X | X [1] | X |
| Setpoint failure (setpoint < 4 mA) | **SETPOINT < 4 mA (OPEN LOOP)** | **SETPOINT** | X | X | X | X |
| No supply voltage | **NO SUPPLY VOLTAGE** | **NO POWER** | X | X | X [1] | X |
| Power unit disconnected | **POWER UNIT DIS-CONNECTED** | **NOCONNPART** | X | X | X [1] | X |
| Temperature sensor failure | **TEMPERATURE PROBE DEFECT** | **TEMPSENS** | X | X | X | X |
| Fuse failure | **OPEN FUSE** | **FUSE** | X | X | X [1] | X |
| Thyristor short circuit | **THYRISTOR SHORT CIRCUIT** | **THYRISTOR** | X | X | X [1] | X |
| EEPROM error | **MEMORY ERROR** | **EEPROM** | X | X | X [1] | |
| I2C error | **I2C ERROR** | **I2C** | X | | X | |

*Table 4-2. Fault Messages (Continued)*

| Fault Description | Software Message | Display Message | Display Red | Relay | Pulse Inhibit | Data Logger |
|---|---|---|---|---|---|---|
| Ethernet error | **ETHERNET ERROR** | **ETH** | | | | |
| USB error | **USB ERROR** | **USB** | | | | |
| Firmware error | **FIRMWARE ERROR** | **FIRMWARE** | X | X | X [1] | X |
| Power unit is too small for type | **POWER UNIT INCOMPATIBLE** | **INCOMPPART** | X | | X | X |
| U-measuring range is exceeded | **U MEASURING RANGE EXCEEDED** | **U RANGE** | X | | | X |
| I-measuring range is exceeded | **I MEASURING RANGE EXCEEDED** | **I RANGE** | X | | | X |
| Negative power | **NEGATIVE POWER** | **NEG POWER** | X | | | X |
| LCD error | **LCD ERROR** | **LCD** | X | | | |
| Parameter error | **PARAMETER ERROR** | **PARAMETER** | X | | X [1] | X |

[1] Cannot be disabled.

*Table 4-3. Status Messages*

| Status Description | Software Message | Display Message | Display Red | Relay | Data Logger |
|---|---|---|---|---|---|
| Pulses are switched on | **IMPULSE ON** | **PULSE ON** | | | |
| Pulse off at terminal X2.1-X2.2 | **PULSE SWITCH OFF TERMINAL** | **PULOFFT** | X | | |
| Pulse off at hardware (error) | **PULSE SWITCH OFF HARDWARE ERROR** | **PULOFFHW** | X | | X |
| Pulse off at software (configurable) | **PULSE SWITCH OFF EVENT** | **PULOFFEV** | X | | X |
| Pulse off external | **PULSE SWITCH OFF EXTERN** | **PULOFFEX** | X | | |
| Left rotating field (message only) | **LEFT ROTATING FIELD** | **LEFTROTF** | X | X | X |

*Table 4-3. Status Messages (Continued)*

| Status Description | Software Message | Display Message | Display Red | Relay | Data Logger |
|---|---|---|---|---|---|
| U limit | **U LIMIT** | **U LIMIT** | | | X |
| I limit | **I LIMIT** | **I LIMIT** | | | X |
| P limit | **P LIMIT** | **P LIMIT** | | | X |
| $I_{PEAK}$ limit | **I PEAK LIMIT** | **IPEAKLIMIT** | | | X |
| Alpha is restricted | **ALPHA RESTRICTED** | **ALPHA** | | | |
| Ts is restricted | **SWITCH ON TIME RESTRICTED** | **TS** | | | |
| Maximum controller output is reached | **MAXIMUM OUTPUT REACHED** | **MAXCONTROL** | | | |
| Setpoint of bus module is active | **BUSMODULE SETPOINT ACTIVE** | **BUS SETP** | | | |
| Bus module is connected | **BUSMODULE CONNECTED** | **BUS CONN** | | | |
| Clock is not set | **CLOCK NOT SET** | **NO CLOCK** | | | |
| Power units are higher than type | **POWER UNIT DIFFERENT** | **DIFF PPART** | | | X |
| Power controller is OK | **POWER CONTROLLER OK** | **THYRO OK** | | | |

*Table 4-4. Limit Messages*

| Limit Description | Software Message | Display Message | Display Red | Relay | Data Logger |
|---|---|---|---|---|---|
| $U_{MAINS}$ below minimum | **U MAIN < MINIMUM** | **UN MIN** | | | X |
| $U_{MAINS}$ above maximum | **U MAIN > MAXIMUM** | **UN MAX** | | | X |
| $U_{LOAD}$ below minimum | **U < MINIMUM** | **UL MIN** | | | X |
| $U_{LOAD}$above maximum | **U > MAXIMUM** | **UL MAX** | | | X |

*Table 4-4. Limit Messages (Continued)*

| Limit Description | Software Message | Display Message | Display Red | Relay | Data Logger |
|---|---|---|---|---|---|
| $I_{LOAD}$ below minimum | **I < MINIMUM** | **IL MIN** | | | X |
| $I_{LOAD}$ above maximum | **I > MAXIMUM** | **IL MAX** | | | X |
| $P_{LOAD}$ below minimum | **P < MINIMUM** | **PL MIN** | | | X |
| $P_{LOAD}$ above maximum | **P > MAXIMUM** | **PL MAX** | | | X |
| $R_{LOAD}$ below minimum | **R < MINIMUM** | **RL MIN** | | | X |
| $R_{LOAD}$ above maximum | **R > MAXIMUM** | **RL MAX** | X | X | X |
| $I_{PEAK}$ above maximum | **I PEAK > MAXIMUM** | **I_PEAK MAX** | | | X |
| Heatsink temperature above maximum | **TEMPERATURE UNIT > MAXIMUM** | **T_HEAT MAX** | X | X | X |

## Relay Indicator

Errors and faults are indicated by the touch display, the fault and limit relay, and the optional bus interface.

☞ **Important**
This manual describes the default configuration. Though these functions are fully configurable, AE recommends not changing the default configuration.

Fault signaling relay K1 has a changeover contact. Messages that cause the fault signaling relay to switch can be set with Thyro-Tool Pro software. In the default state, fault signaling relay K1 functions on the closed circuit principle.

In the event of the following errors, the fault signaling relay de-energizes and the power controller switches off:

- SYNC error
- Internal error
- Undervoltage in the mains
- Master/slave error
- Error rotating field/phase

In the event of the following errors, the fault signaling relay de-energizes, the power controller remains on, and the touch display turns red and displays a fault message:

- Undercurrent in the load circuit
- Overtemperature

# ANALOG AND DIGITAL I/O

There are two standard I/O connectors on the front of the unit:

- USB connector X6, for configuration using a PC
- Ethernet (X6)

☞ **Important**
Do not start a USB connection while the controller is controlling a critical process. A short output interruption might occur.

The special Advanced Energy USB cable should be used between the PC and the unit to avoid malfunctions.

*Figure 4-2. USB cable*

Connect the shorter part of the wiring cable to the unit and connect the longer part of the wiring cable to the USB port on the PC.

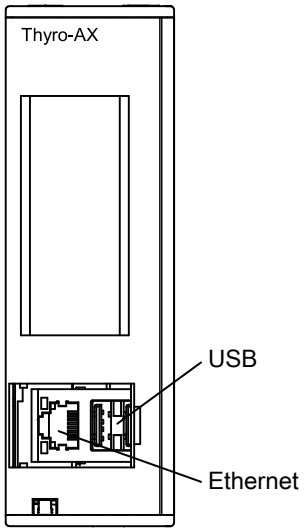


*Figure 4-3. Front I/O connectors*

There are four connectors on the top of the unit:

- AC phase connection X1
- AC phase connection X10 (connection required on some 3-phase units)
- 85 VAC to 265 VAC auxiliary power input X4
- Fault relay K1 connector X3

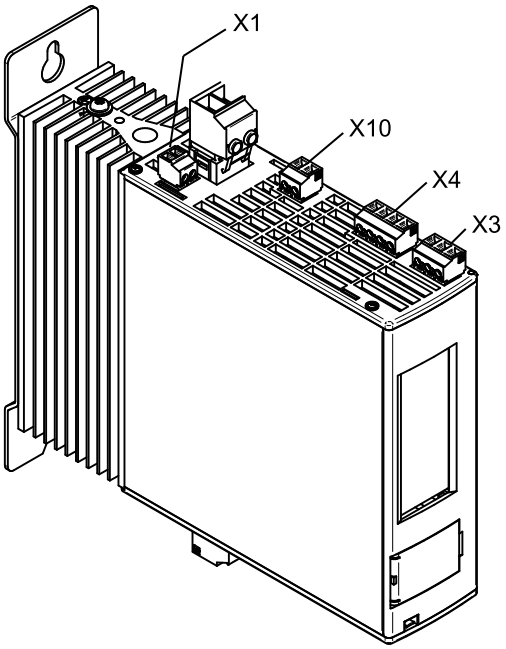


*Figure 4-4. Top connectors*

There are two I/O connectors on the bottom of the unit:

- Analog I/O connector X2

- Multi I/O connector X22

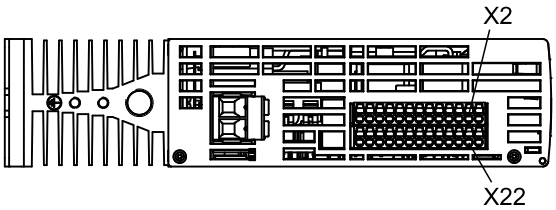


*Figure 4-5. Bottom connectors*

☞ **Important**
All digital and analog control cables must be shielded. Connect the cable shields to the shield terminal on the unit.

*Table 4-5. AC phase connection (X1)*

| Pin | Function |
|---|---|
| X1.1 | For 1-phase and 2-phase units, add an L2 or N connection according to the connection diagram (see "Connection Diagrams" on page 5-29). Do not alter the factory wiring. |
| X1.2 | For 1-phase and 2-phase units, add an L2 or N connection according to the connection diagram (see "Connection Diagrams" on page 5-29). Do not alter the factory wiring. |

*Table 4-6. AC phase connection (X10) (present only on some 3-phase units)*

| Pin | Function |
|---|---|
| X10.1 | Factory wired, do not alter |
| X10.2 | Factory wired, do not alter |

*Table 4-7. AC auxiliary power input (X4)*

| Pin | Function |
|---|---|
| X4.1 | 85 VAC to 265 VAC (required connection) |
| X4.3 | 85 VAC to 265 VAC (required connection) |

*Table 4-8. 13-pin analog I/O connector (X2)*

| Pin | Function |
|---|---|
| X2.1 | Control ground |
| X2.2 | Pulse lock |

*Table 4-8. 13-pin analog I/O connector (X2) (Continued)*

| Pin | Function |
|---|---|
| X2.3 | Control ground |
| X2.4 | Analog setpoint, 10 V maximum or 20 mA maximum |
| X2.5 | Control ground |
| X2.6 | Sync out, multi I/O 2 out |
| X2.7 | Sync in |
| X2.8 | +5 V |
| X2.9 | Analog output (setpoint potentiometer power 0 V to 10 V, or 0(4) mA to 20 mA) |
| X2.10 | Control cable shield |
| X2.11 | Feedback input 0(4) mA to 20 mA |
| X2.12 | Analog output 2 |
| X2.13 | Control ground |

*Table 4-9. 13-pin multi I/O connector (X22)*

| Pin | Function |
|---|---|
| X22.1 | Bus module detection/setpoint selection, multi I/O 3 (input) |
| X22.2 | TxD |
| X22.3 | RxD |
| X22.4 | Control ground |
| X22.5 | Slave connection |
| X22.6 | Slave connection |
| X22.7 | Control ground |
| X22.8 | Analog output 3 |
| X22.9 | Multi I/O 1 (input/output) |
| X22.10 | External voltage transducer |
| X22.11 | Control ground |
| X22.12 | External current transducer |
| X22.13 | External current transducer |

*Table 4-10. Relay K1 connector (X3)*

| Pin | Function |
|---|---|
| X3.1 | Common |
| X3.2 | Normally open |

*Table 4-10. Relay K1 connector (X3) (Continued)*

| Pin | Function |
|---|---|
| X3.3 | Normally closed |

*Table 4-11. Fan connector (X7)*

| Pin | Function |
|---|---|
| X7.2 | 230 VAC 50 Hz/60 Hz |
| X7.3 | 230 VAC 50 Hz/60 Hz |

## Multi I/O

The multi I/O feature allows flexible classification of digital inputs and outputs for internal device features or status updates. This allows the adjustment of Thyro-AX for very specific customer and application related requirements. The table below shows the features which can be assigned to the multi I/O inputs and outputs using the Thyro-Tool Pro software.

*Table 4-12. Multi I/O functions*

| Functions | Description |
|---|---|
| **Output Functions** | |
| **OFF** | No function. |
| **Events** | Output of messages (events). Messages can be set. |
| **SYT-OUT** | Mains load optimization, output signal for following unit. |
| **REL_OUT** | Mains load optimization, signal at the end of waiting period. |
| **SYNC_OUT** | Determined square wave signal of SYNC voltage to which the unit synchronizes 50 Hz/60 Hz. |
| **REL_OUT** | Position of relay. |
| **THY_POS** | Logic signal for positive thyristor. |
| **THY_NEG** | Logic signal for negative thyristor. |
| **TS_TIME** | Logic signal for turn-on time Ts at TAKT. |
| **TO_TIME** | Logic signal for cycle period T0. |
| **OUTPUT** | Signal for level of modulation by flashing frequency. |
| **BUS** | Signal when the bus module is active. |
| **Input Functions** | |
| **OFF** | No function. |
| **SYT-IN** | Mains load optimization, Input signal of previous unit. |

*Table 4-12. Multi I/O functions (Continued)*

| Functions | Description |
|---|---|
| **SWITCH** | Input of operating mode SWITCH. |
| **BUS_SW** | Input for selection of setpoint (Local / Remote). |
| **OPERATE** | Input for switching operating mode between VAR and TAKT. Prior VAR must be active as operating mode. |
| **Dig_SW2_UP** | Increase digital setpoint 2 with external button. |
| **Dig_SW2_DOWN** | Decrease setpoint 2 with external button. |

The following table lists the technical specifications of the five different multi I/O inputs and outputs. Please note that they are distinguished from each other in signal level, in inverting, and in capacity. The Thyro-Tool Pro software is necessary for changing the default setting of multi I/O assignments.

*Table 4-13. Multi I/O ports*

| Number | I/O [1] | Connection | Default Value | Logic Level | Signal Level |
|---|---|---|---|---|---|
| Multi I/O 1 | Input [2] | X22.9 | SWITCH | Active high | 0 V - 30 V<br>$R_I$ = 3.5 kΩ |
| | Output | X22.9 | | Active low | 12 V<br>$R_I$ = 3.5 kΩ |
| Multi I/O 2 | Input | X2.7 | Syt-In | Active high | 0 V - 24 V<br>$R_I$ = 10 kΩ |
| | Output | X2.6 | Syt-Out | Active low | 12 V<br>$R_I$ = 3.5 kΩ<br>Max 359 µA toward GND |
| Multi I/O 3 | Input | X22.1 | | | Bridge to GND<br>$R_I$ = 10 kΩ |
| | Output | Green LED next to Ethernet port | | Active high | |
| Multi I/O 4 | Input | X2.4 | Analog SW1<br>Increase digital setpoint 2 | Active high | Bridge to GND<br>$R_I$ = 10 kΩ |
| Multi I/O 5 | Input | X2.11 | Analog SW2 | Active high | Bridge to GND |

*Table 4-13. Multi I/O ports (Continued)*

| Number | I/O [1] | Connection | Default Value | Logic Level | Signal Level |
|---|---|---|---|---|---|
| | | | Decrease digital setpoint 2 | | $R_I$ = 10 kΩ |

[1] Direction selected by jumper.
[2] Default setting

Digital setpoint 2 can be changed using external switches, as shown in the following figure.

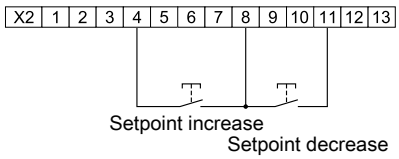


*Figure 4-6. Digital setpoint 2 switches*

## Related Links

- "Connecting I/O and Auxiliary Connectors" on page 5-22

# TOUCH DISPLAY

The parameters of the Thyro-AX power controller can be altered via the integrated touch display. In addition, the touch display shows the current values of the power controller.

☞ **Important**

Do not use any pointed or sharp-edged objects to operate the touch display, as they can damage the surface of the screen.

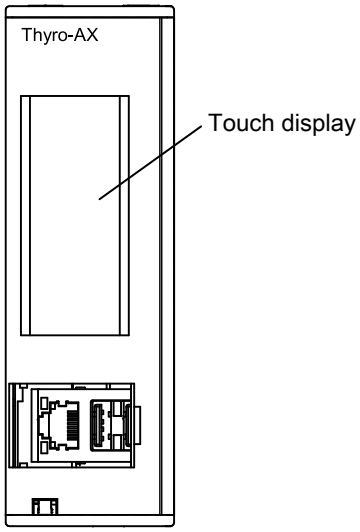


*Figure 4-7. Touch display*

The touch display is a pressure sensitive screen which is operated using your finger. The touch display contains fields which react to light pressure to register buttons being pressed. Interactive areas vary depending on the displayed menu. There is a large actual value button and requirement specific buttons displayed in the lower section of the screen. After 30 seconds without a button being pressed, the screen display reverts to the actual value view. If there are more entries available than can be displayed on the screen, a horizontal line appears when approaching the first or last entry. This marks the transition from the start to the end of the list. You can use the arrow buttons to skip over the line.

## Operation of the touch display

All supported screens can be operated with a few buttons. The entry displayed determines the function of the button. A frame outline indicates the current selection of the parameters in the list. The selected parameter can be altered with the **OK** button. Depending on the parameter variable, a screen follows that offers alternative values for the parameter. In the following figure, the symbols and their various possible depictions are displayed.

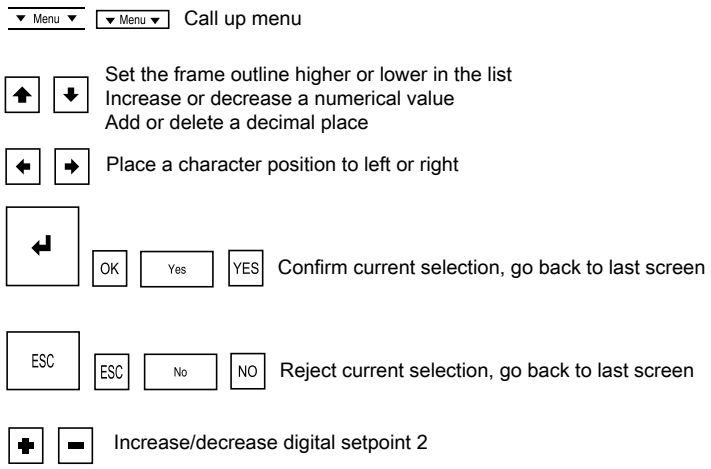


*Figure 4-8. Navigation*

The following figure shows the entry of numerical values via the touch screen buttons.

- Use the up and down buttons to increase or decrease the value number.
- Use the left and right buttons to change the position of the number to be modified.
- Press the right arrow button and navigate to the end of the row to confirm an entry.
- Press the left arrow button and navigate to the end of the row to cancel an entry.

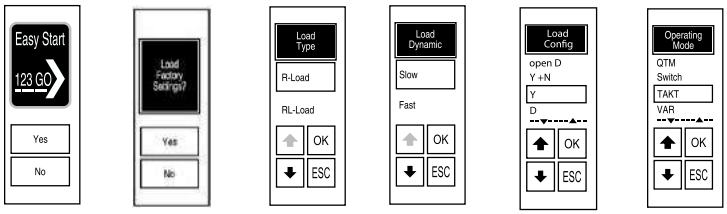


*Figure 4-9. Numerical entry*

## Actual Value View And Actual Value Button

To display current unit values, press the button corresponding to the values you want to display. Press the value button again to display subsequent screens for the selected value. Depending on the number of phases of the power controller, the actual value displays for all phases. The final screen gives the type information of the unit. The last line on the screen gives the EasyStart identification. You can also display this information via **Menu→ ActVal**.

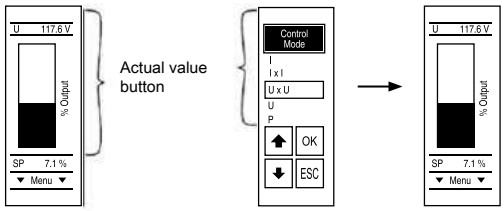


*Figure 4-10. Actual value*

Touch the actual value button area to display the actual value view. Whatever changes you made in the current menu remain active and can be saved manually.

As shown in Figure 4-10, the actual value area extends over the top portion of the screen. Regardless of what is displayed on the screen, when you touch anywhere in the actual value area, the current screen display is overwritten with the actual value for the active parameter. You cannot access the actual value view during EasyStart.

## Message Overview And Acknowledgment

If a message (event) causes the display to turn red, you can use the down arrow buttons to show active events. Press **OK** to respond to a displayed "acknowledge" message.

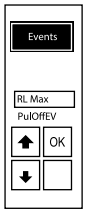


*Figure 4-11. Events screen*

*Table 4-14. Fault table*

| Fault Description | Software Message | Display Message | Acknowledgement Via Display |
|---|---|---|---|
| Thyristor short circuit | `Thyristor short circuit` | **Thyristor** | X |
| U-measuring range is exceeded | `U-MEASURING RANGE IS EXCEEDED` | **U RANGE** | X |
| I-measuring range is exceeded | `I-MEASURING RANGE IS EXCEEDED` | **I RANGE** | X |
| Negative power | `NEGATIVE POWER` | **NEG POWER** | X |

*Table 4-15. Status table*

| Fault Description | Software Message | Display Message | Acknowledgement Via Display |
|---|---|---|---|
| U limit | `U LIMIT` | **U LIMIT** | X |
| I limit | `I LIMIT` | **I LIMIT** | X |
| P limit | `P LIMIT` | **P LIMIT** | X |
| $I_{PEAK}$ limit | `I PEAK LIMIT` | **IPEAKLIMIT** | X |
| α is restricted | `ALPHA RESTRICTED` | **ALPHA** | X |
| $T_s$ is restricted | `SWITCH ON TIME RESTRICTED` | **TS** | X |
| Maximum controller output is reached | `MAXIMUM OUTPUT REACHED` | **MAXCONTROL** | X |

*Table 4-16. Monitoring table*

| Fault Description | Software Message | Display Message | Acknowledgement Via Display |
|---|---|---|---|
| $U_{MAINS}$MIN | `U MAIN < MINIMUM` | **UN MIN** | X |
| $U_{MAINS}$MAX | `U MAIN > MAXIMUM` | **UN MAX** | X |
| $U_{LOAD}$MIN | `U < MINIMUM` | **UL MIN** | X |
| $U_{LOAD}$MAX | `U > MAXIMUM` | **UL MAX** | X |
| $I_{LOAD}$MIN | `I< MINIMUM` | **IL MIN** | X |
| $I_{LOAD}$MAX | `I> MAXIMUM` | **IL MAX** | X |
| $P_{LOAD}$MIN | `P< MINIMUM` | **PL MIN** | X |
| $P_{LOAD}$MAX | `P> MAXIMUM` | **PL MAX** | X |
| $R_{LOAD}$MIN | `R< MINIMUM` | **RL MIN** | X |
| $R_{LOAD}$MAX | `R> MAXIMUM` | **RL MAX** | X |
| $I_{PEAK}$MAX | `I PEAK > MAXIMUM` | **I_PEAK MAX** | X |

## EasyStart

On initial power-up, EasyStart launches, displaying help information for the configured parameters. The following figure shows the screen sequence. If you need to change entered parameters, press **ESC** to display the last previous screen. While

EasyStart is active, pulse inhibition prevents power from being emitted at the load side.

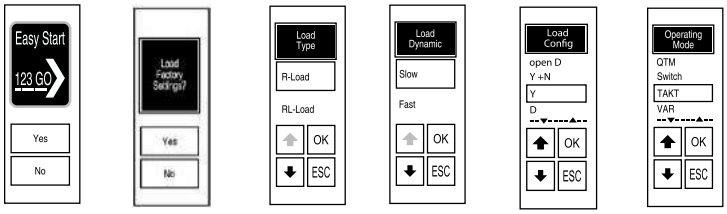


*Figure 4-12. EasyStart*

**Start Screen**
Press **Yes** to start changing parameters. Press **No** to abort the EasyStart session (for example, if you need to transfer a previously-saved parameter file to the device using the Thyro-Tool Pro software).

**Load Factory Settings**
Press **Yes** to return the Thyro-AX power controller to its default settings. Press **No** to retain the current settings. After initially launching EasyStart, each time you start the program EasyStart will present this screen.

**Load Type**
Use this screen to set the load to either resistive or inductive. If you set the load type to **R-Load**, the power controller clocks more quickly and provides a larger dynamic range on the load side. If you set the load type to **RL-Load**, the angle of the first half wave (**Alpha 1st**) is gated each time it switches.

**Load Type, Dynamic Of The Load**
This screen appears only if the configuration **R-Load** has been selected beforehand. When configuring a load with heat inertia load with Slow (T0 = 1 s), the distance between the ignition cycles increases so that the switch on and switch off duration lasts longer. In the case of loads which are thermally easy to influence by external effects, the switching time can be shortened by configuring Fast (T0 = 0.1 s) to achieve a more even warm up.

**Load Type, Connection**
Select the correct load type from the drop-down list. See "Configuring the Load" on page 5-25 for additional information.

**Operating Mode**
Select the operating mode from the drop-down list. The selections include QTM, Switch, TAKT, and VAR. See "Operating Modes" on page 5-36 for additional information.

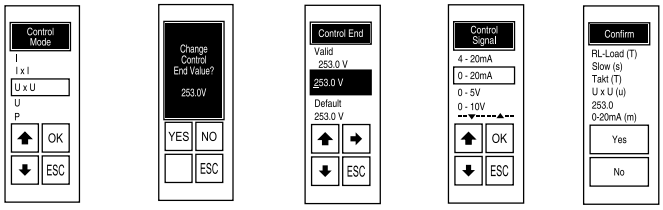


*Figure 4-13. EasyStart*

**Control Mode**
Select the control mode from the drop-down list. The selections include I, I², U, U², P, and Off. See "Operating Modes" on page 5-36 for additional information.

**Change Control End Value**
This screen displays if any control mode except **Off** is selected. The control end value is the maximum value for control and limitation. In the case of full control through the setpoint, this value defines the maximum that can be reached at the output. The unit is dependent on the control mode. In the case of voltage based control it is U_Max in V, with current based control it is I_Max in A, and with power based control it is P_Max in W. In most cases the preconfigured value is sufficient and can be confirmed with the **No** button.

**Control End Value**
This screen displays if you pressed **Yes** on the **Change Control End Value** screen. Change the control end value as needed, and then press **OK** to accept the new value.

**Control Signal**
Select the control signal input variable that corresponds to the signal for the first analog setpoint definition. Leave the second analog setpoint set to 0 V to 5 V to enable an offset by setting the setpoints using an external potentiometer. The three analog outputs also receive the variable of the setpoint that you selected. You can change the configuration of the second analog setpoint using EasyStart. See "Electrical Specifications" on page 3-4 for the setpoint input electrical specifications.

**Confirmation Of The Settings**
Press **Yes** to save all settings to the internal EEPROM and end pulse inhibition. Press **No** to return to the previous screen. Each character in parentheses to the right of a setting name is used by EasyStart to identify that setting.

# EasyStart Identification Code

The EasyStart identification feature makes it easy to compare the configuration of multiple devices. A series of characters is generated which corresponds to the selected settings. If additional settings have been made outside of those covered by EasyStart, then a + (plus symbol) displays as final character in the identification code. Touch the actual value area on the main screen several times to display the EasyStart identification code, which is the final line of the display.

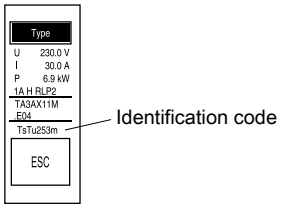


*Figure 4-14. EasyStart identification code*

## Restriction Codes For Parameterization And Digital Setpoint 2

You can enable/disable touch display access for the following:

- Parameter alteration: Display or hide the Setting menu (default = display).
- Digital setpoint 2: Enable or disable the ability to change the digital setpoint 2 settings following the display of the actual value screen (default = disabled).

If the actual value view is not already called up this can be reached via **Menu→ ActVal**. The screen for the DS2 follows the other actual value screens and appears last. Use the + and - buttons to change the setpoint. By default, the setpoint value is added to the other setpoints, and thus can be used as an offset.

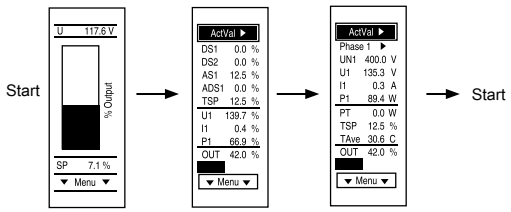


*Figure 4-15. Restriction codes*

The functions can be hidden or displayed by entering the restriction code under **Menu→ Code**.

- DS2 restriction code: Enable 234, disable 432 (enabled by default)
- Parameter restriction code: Enable 345, disable 543 (enabled by default)

## Save And Load Parameters With USB Drive

Parameters can be transferred from one device to another of the same type by using a USB drive. The unit will work with most USB drives that do not need special drivers.

When a USB drive is connected, a request will appear on the touch display to set the pulse inhibition. This will set the output power to 0. This is a requirement for loading and saving of parameters from or to the USB drive.

An option will appear to read parameters from, or save parameters to, the USB drive. Existing parameters of the same device type will be overwritten.

Save parameters loaded from the USB drive to the device EEPROM.

# Menu Structure

*Table 4-17. Menu structure*

| Menu | Submenu | | Default | Remarks |
|---|---|---|---|---|
| **ActVal** | | | | Main menu of the current value overview. Also appears automatically after a period of 30 seconds of not changing. |
| **Event** | | | | List of all current active messages (events). **OK** has the function of acknowledging the relevant message. |
| **Settings** | **Operating** | | 1A: TAKT<br>2A: TAKT<br>3A: VAR | Operating mode |
| | **Regulator** | | U x U | Voltage, current, or power based control |
| | **Limit** | | Type value | Maximum value for current, voltage, and power |
| | **TAKT** | **CyclTime** | 50 per | Cycle period |
| | | **Alpha1st** | 1A: 60°<br>2A: 90°<br>3A: 90° | Phase angle of the first half wave |
| | | **SST** | 6 per | Soft-start time |
| | **Switch** | **Alpha1st** | 1A: 60°<br>2A: 90°<br>3A: 90° | Phase angle of the first half wave |
| | | **SST** | 6 per | Soft-start time |
| | **Monitoring** | | R_Max = (type voltage * 2)/type current | R_Max for load monitoring |
| | **AS 1** | | 0 mA – 20 mA | Analog setpoint 1 signal |
| | **AS 2** | | 0 mA – 20 mA | Analog setpoint 2 signal |
| | **AO 1** | **Range** | 0 mA – 20 mA | Analog output 1 signal |

*Table 4-17. Menu structure (Continued)*

| Menu | Submenu | | Default | Remarks |
|---|---|---|---|---|
| | | **Source** | Average | Measurement source |
| | | **Value** | OFF | General values output |
| | | **ValuePh** | U | Phase values output when the source is set to L1, L2, L3, min, max, or average |
| | | **ScaleMax** | | Full scale value. |
| | **AO 2** | **Range** | 0 mA – 20 mA | Analog output 1 signal |
| | | **Source** | Average | Measurement source |
| | | **Value** | OFF | General values output |
| | | **ValuePh** | I | Phase values output when the source is set to L1, L2, L3, min, max, or average |
| | | **ScaleMax** | | Full scale value. |
| | **AO 3** | **Range** | 0 mA – 20 mA | Analog output 1 signal |
| | | **Source** | Average | Measurement source |
| | | **Value** | OFF | General values output |
| | | **ValuePh** | OFF | Phase values output when the source is set to L1, L2, L3, min, max, or average |
| | | **ScaleMax** | | Full scale value |
| **ReadSet** | | | | Overview of all device parameters |
| **Code** | | | | Authorization code for parameter changes and digital setpoint entry |
| **Save** | | | | Save the current parameter in the EEPROM. This menu displays after you modify a parameter. |
| **Load** | **Load EEPROM** | | | Load customer parameters from EEPROM |
| | **Load Factory Set** | | | Load default settings |
| **TeachIn** | | | | Start measuring the load for automatic load failure detection |
| **EasyStart** | | | | Start the device quick configuration |
| **Eth.Set** | **DHCP/ Static** | **DHCP** | | Ethernet port address mode |
| | **IP Adr** | **192.168.0.100** | | Ethernet port IP address |

*Table 4-17. Menu structure (Continued)*

| Menu | Submenu | | Default | Remarks |
|---|---|---|---|---|
| | **Submask** | **255.255.255.0** | | Ethernet port submask |
| | **Gateway** | **192.168.0.254** | | Ethernet port gateway |
| | **1.DNS** | **194.25.2.129** | | Ethernet port DNS |
| | **2.DNS** | **130.146.25.194** | | Ethernet port DNS |
| **USB Menu** | | | | Read and write the parameters to a USB flash drive |

# SOFTWARE USER INTERFACE

The optional Thyro-Tool Pro software is available for commissioning and visualization. This software can be used to:

- Update firmware
- Set and display parameters
- Display current operating conditions and events
- Create a time-stamped data record
- Create data charts

☞ **Important**
Do not start a USB connection while the controller is controlling a critical process. A short output interruption might occur.

## Using the Software

### INSTALLATION

To install the Thyro-Tool Pro software, double-click the .exe file provided by AE. During installation, a server (Windows® service: ThyroWindowsService) and client are installed. The server and client start in parallel when the software is started.

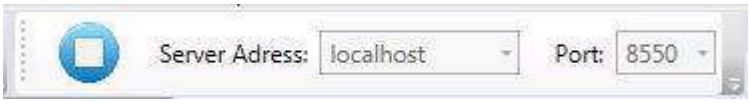


*Figure 4-16. Connection to local installed server*

The left side of the window offers a file explorer for opening files and directly connected devices. On the right side, tabs are shown for each subsection that has been selected by double-clicking it. You can switch between the open windows by:

- Double-clicking the file explorer
- Clicking the appropriate tab
- Selecting the desired option from a drop-down menu (overview with icons)

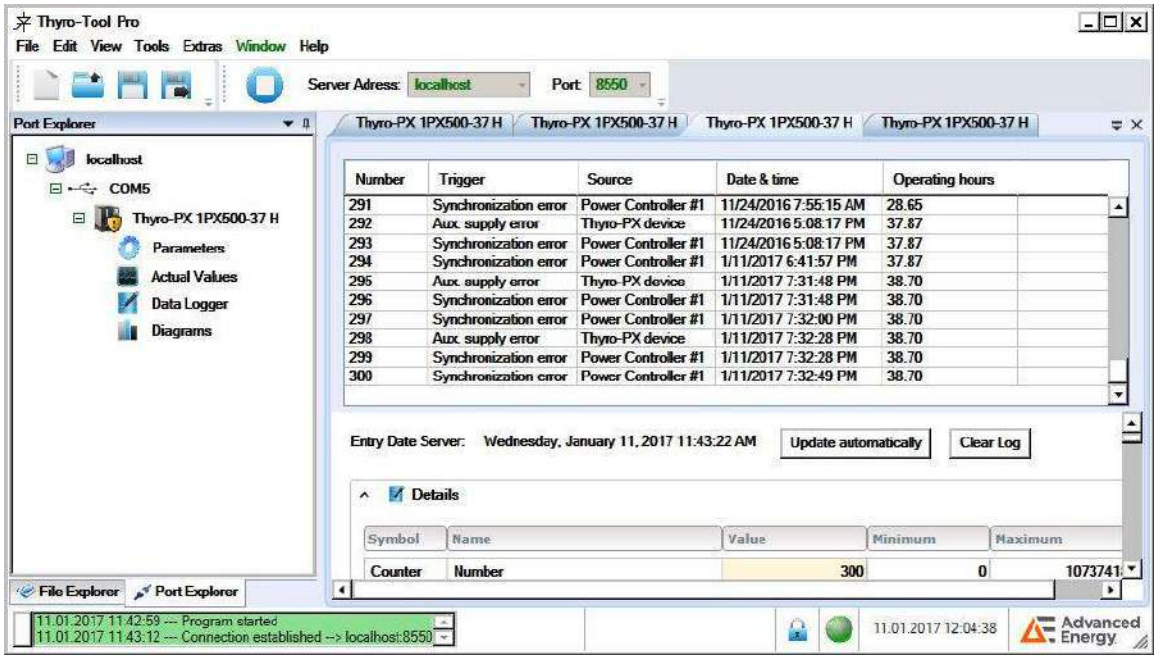


*Figure 4-17. Several open tabs*

The field with status messages at the bottom left corner of the screen can be opened as a separate window for an improved overview. Click the button on the left side of the status field to open a separate status message window.

*Figure 4-18. Status message*

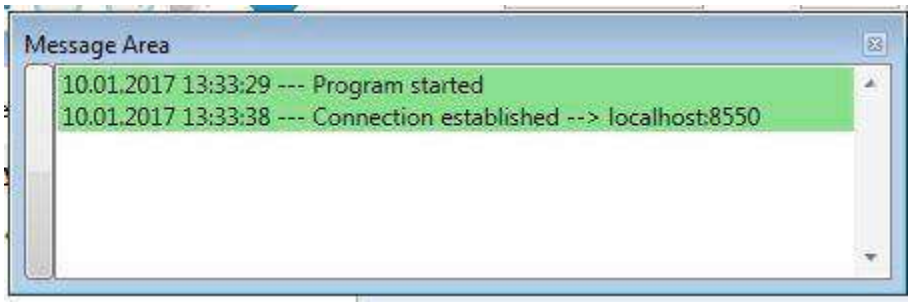


*Figure 4-19. Separate status message window*

You can rearrange the tabs within the window to appear as a:

- Horizontal tab group
- Vertical tab group
- Separate window

To change to a horizontal or vertical tab group, right-click on a tab and make the choice. To open a tab in a separate window, click and drag the tab to the desired location.

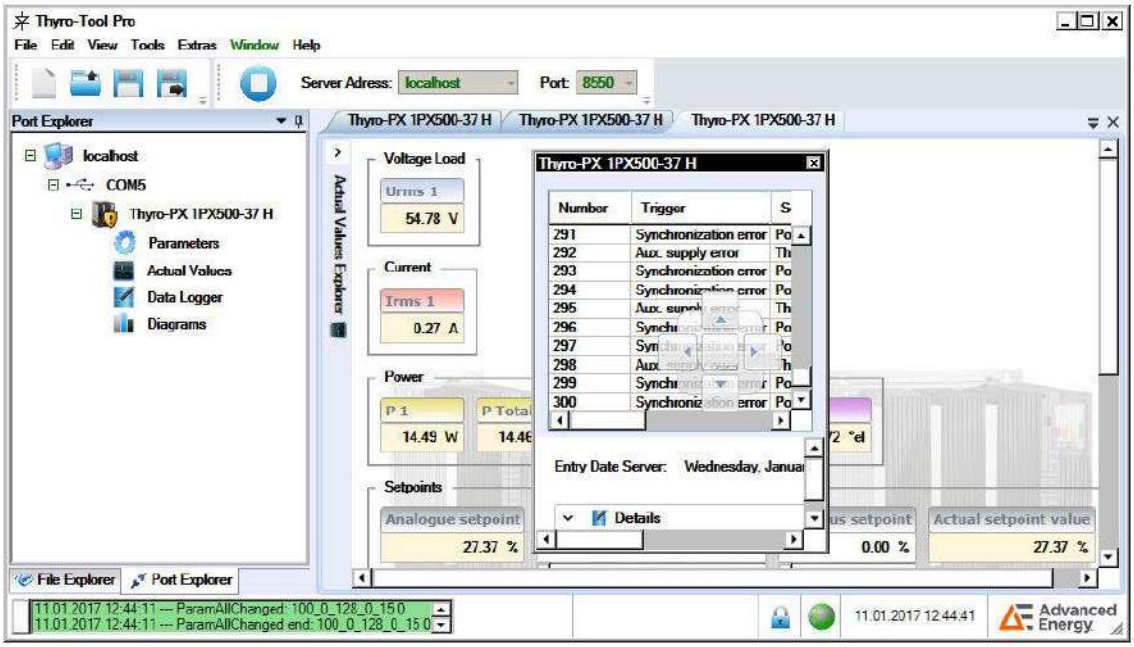


*Figure 4-20. Separate tab*

To save the rearranged tabs, select **View→ Layout→ Save** from the top tool bar.

*Figure 4-21. Save or restore layout*

## MANAGE DEVICES AND FILES

Click the **Port Explorer** tab to show all the Thyro-AX devices connected to the computer. USB connected devices list their virtual COM port. Network connected devices list their IP address. Devices can be connected before and after the software is started.

☞ **Important**

The first time the specific USB port is connected, the computer must configure the port and load the device driver. This will take up to several minutes.

You can select files with a .thyro file extension using the file explorer or the open icon from the tool bar. All open files display in the lower pane. The middle pane displays the .thyro files from the selected folder of the upper window.

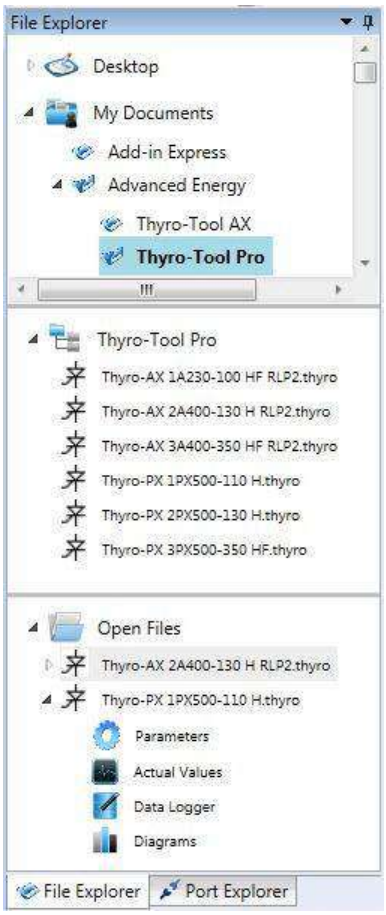


*Figure 4-22. Open .thyro files in file explorer*

The following tabs display when an open device is expanded:

- **Parameters** (to change and adjust the settings)
- **Actual Values** (to display the current available data and event messages)
- **Data Logger** (to record messages with time stamp)
- **Diagrams** (to show time-stamped data as characteristic lines)

The .thyro files include parameters, time, data logger entries, and diagrams.

## PARAMETERS

Double-click a parameter to open its editable window.

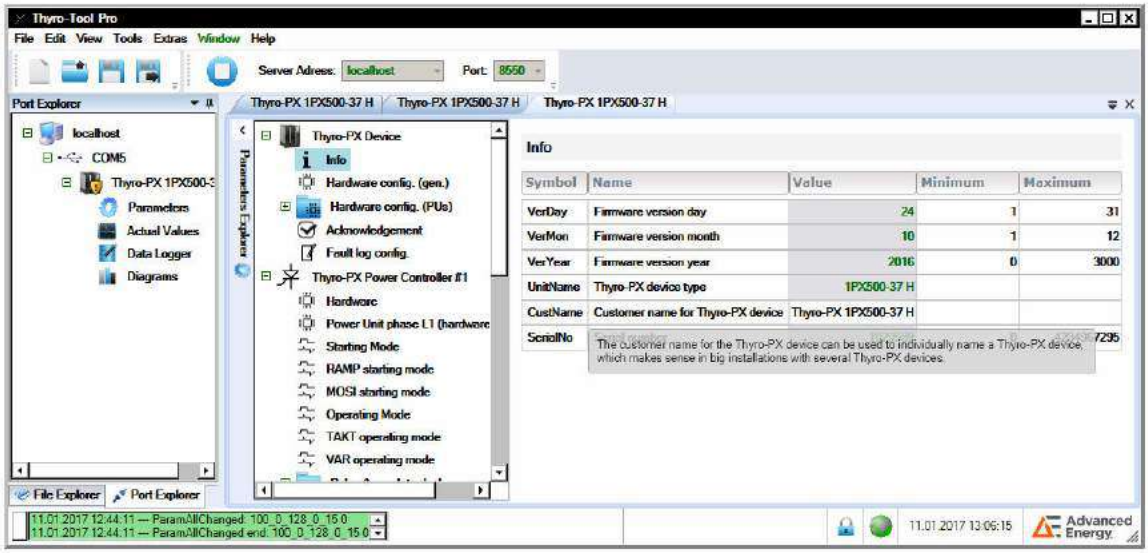


*Figure 4-23. Change name of device*

The features are sorted by groups and are changeable via one click on each heading on the right side. A tooltip for each feature describes the effect of the feature and, if appropriate, the default value and valid value range. If you change a value and then select another field, the changed value displays as red.

- A changed value is effective immediately when the device is connected; by default, a changed value reverts to the last saved value on system startup.
- Click the save icon to save the changed value.

Click the save-as icon to save parameters to your computer as a .thyro file.

To transfer a local file to the device, the device must be connected and the relevant .thyro file must be open (file will appear in the lower window of the file explorer). A drop-down menu opens with a list of all open files and connections under **Tools→ Transfer parameter set**.

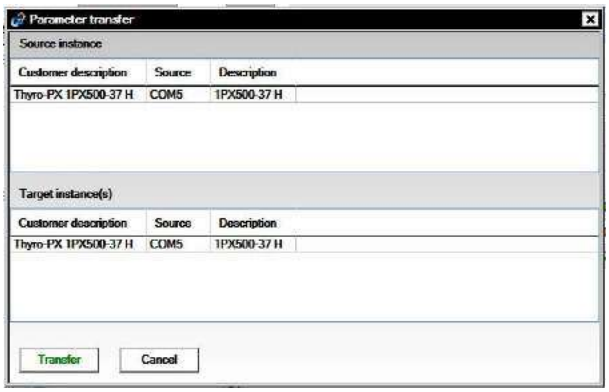


*Figure 4-24. Parameter transfer*

The source file displays under **Source instance** and the describe device is displays under **Target instance**. Click the **Transfer** button to start the file transfer. Subsequently the values have to be saved.

There are three entry methods used for parameters:

- Drop-down menus
- Numeric fields
- Check boxes

With drop-down menu parameters, entries are summarized in a list, as shown in the following figure. Select the desired parameter from the drop-down menu.

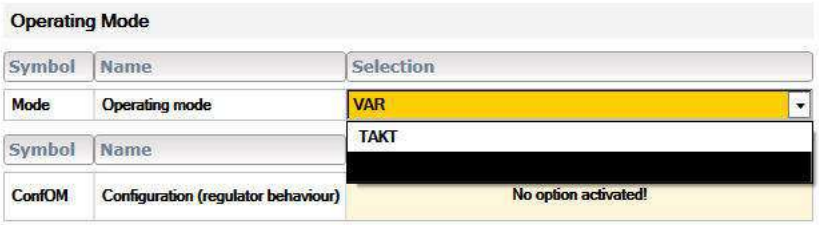


*Figure 4-25. Drop-down menu parameter*

With numeric-field parameters, a number is entered into a field, as shown in the following figure. In those fields, values are displayed to the second decimal place. For internal purposes, additional decimal places can be entered which will be used for calculation. With mouse-over the precise value of each field can be seen without any limitations. This is of particular importance to control parameters.

*Figure 4-26. Numeric-field parameter*

With check-box parameters, a list of possible entries is displayed, as shown in the following figure. Multiple selection is possible and active entries are marked in light green. Active entries are grouped in the overview and non-selected are hidden. These lists are used for selection of messages (events), which should lead to certain actions, or for selection of setpoints, which are added in two switchable, customized configurations and therefore are captured simultaneously in sets.

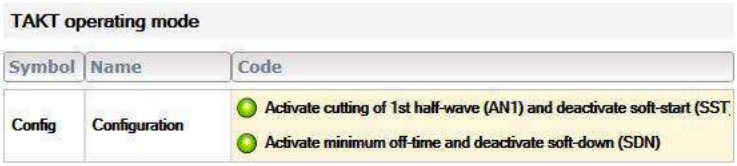


*Figure 4-27. Check-box parameter*

# Installation, Setup, and Operation

## PREPARING TO INSTALL THE UNIT

### Spacing Requirements

Install the unit in a vertical orientation to ensure that thyristors attached to heat sinks are adequately ventilated. If you intend to mount this unit in a cabinet, ensure that the cabinet itself is adequately ventilated, and that the following requirements are met.

- The minimum distance between the bottom of the unit and the bottom of the cabinet or any other object is 100 mm (4″).
- The minimum distance between the top of the unit and the top of the cabinet or any other object is 150 mm (6″).
- The minimum distance between the top of the unit and the bottom of another unit is 150 mm (6″).
- Units may be installed side-by-side with no intervening distance.
- Ensure that the unit is not exposed to sources of heat.

### Dimensional Drawings

The following figures show Thyro-AX unit dimensions, front, and side views.

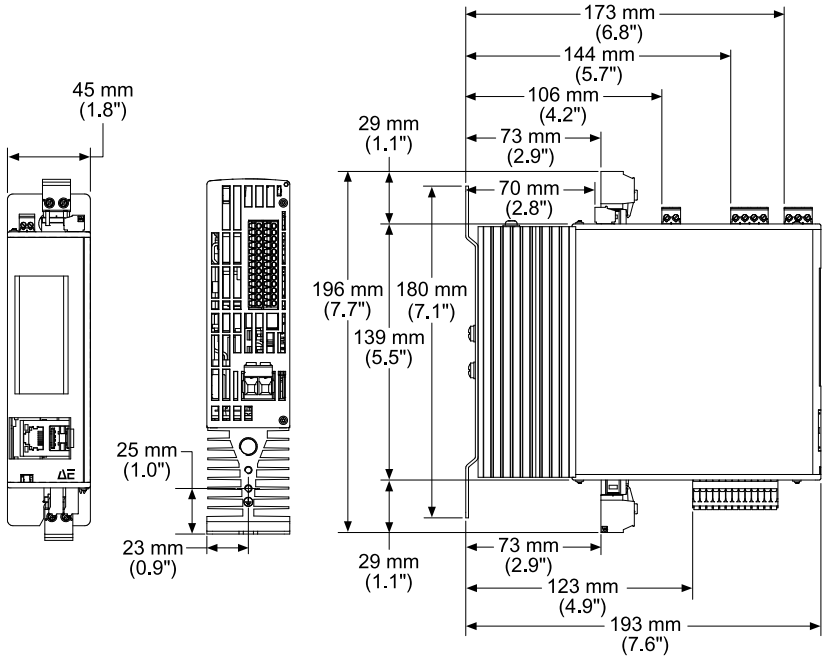


*Figure 5-1. Thyro-AX 1A 16 H*

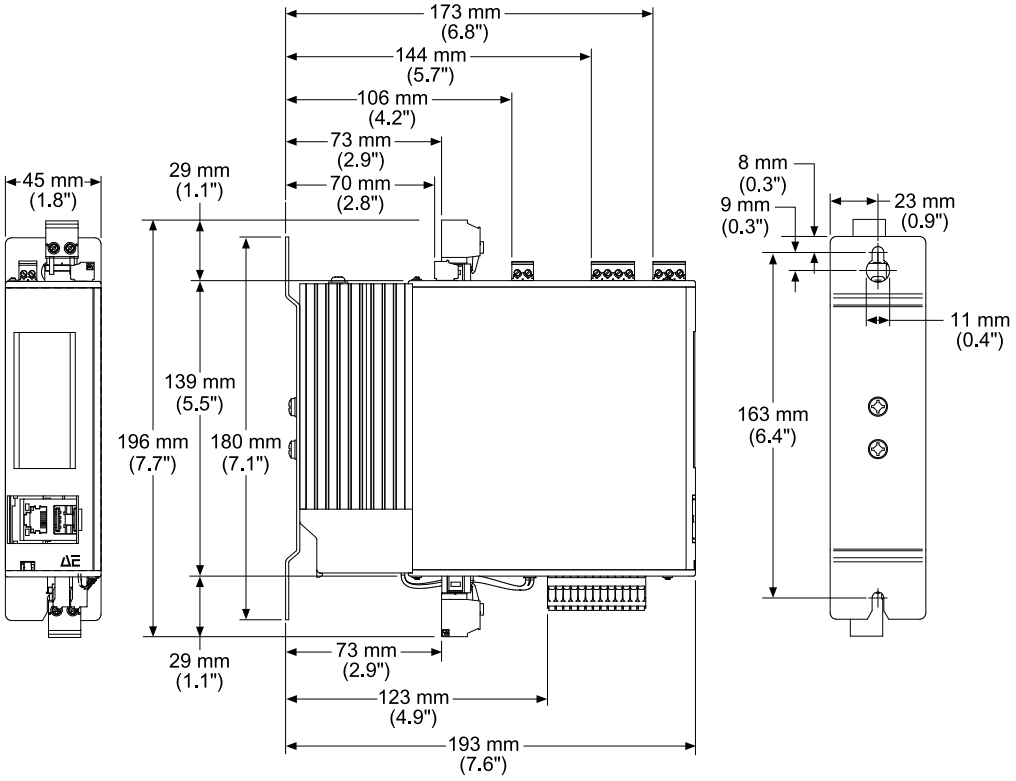


*Figure 5-2. Thyro-AX 1A 30 H*

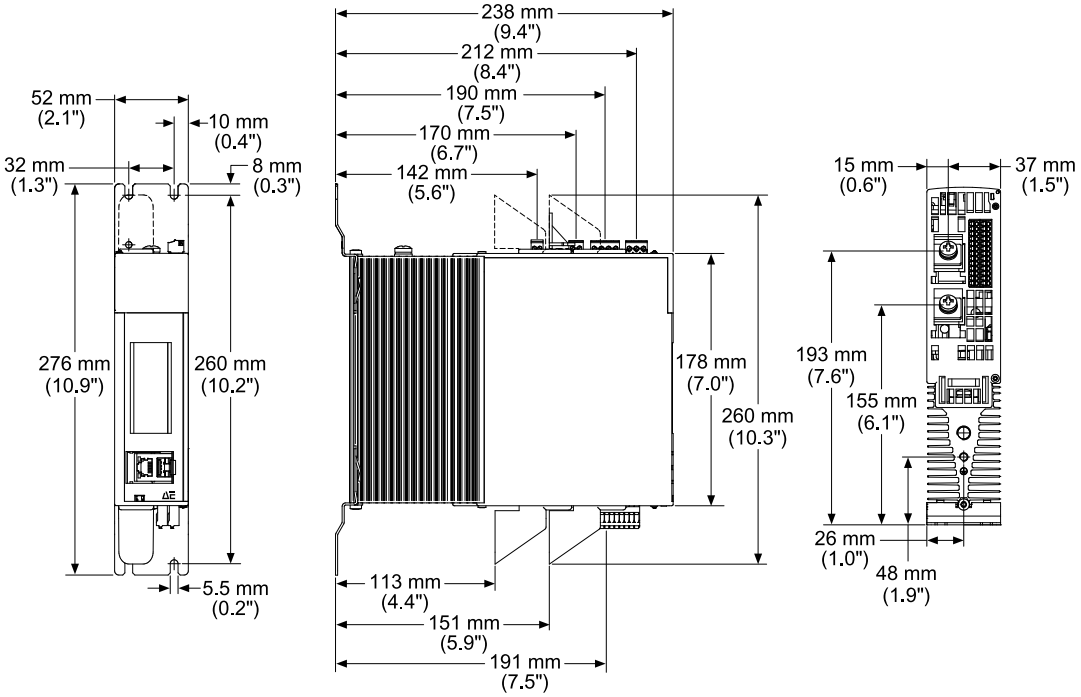


*Figure 5-3. Thyro-AX 1A 45 H, 60 H*

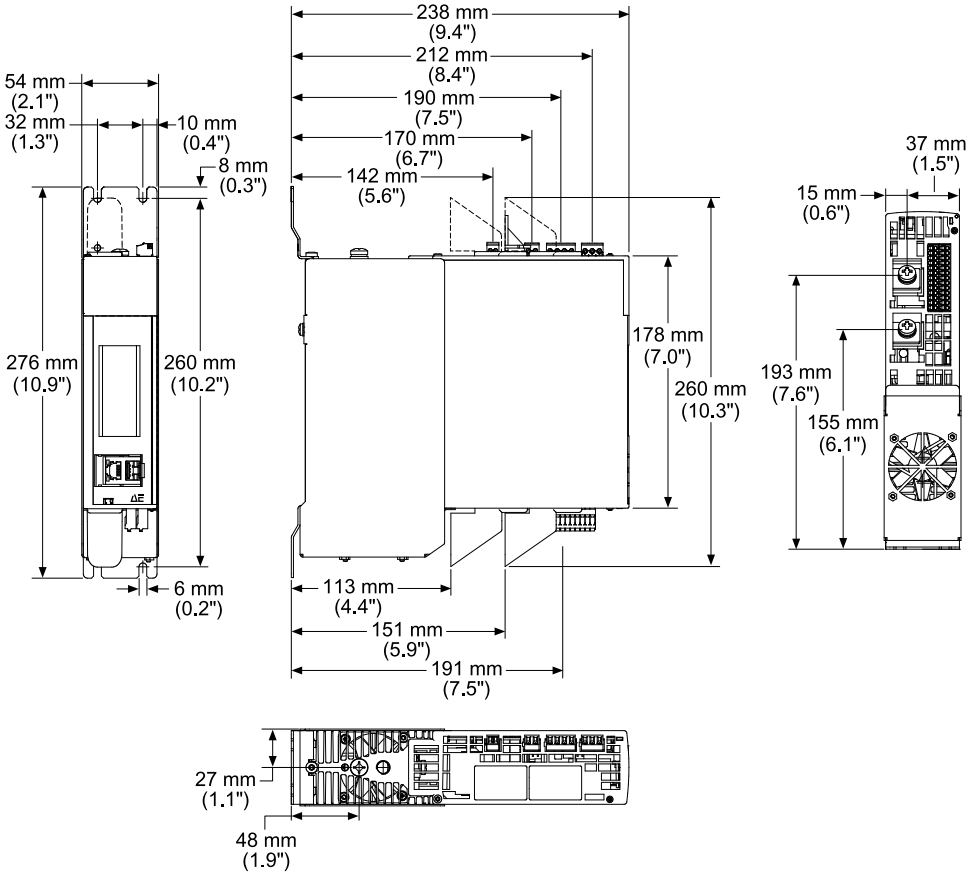


*Figure 5-4. Thyro-AX 1A 100 H*

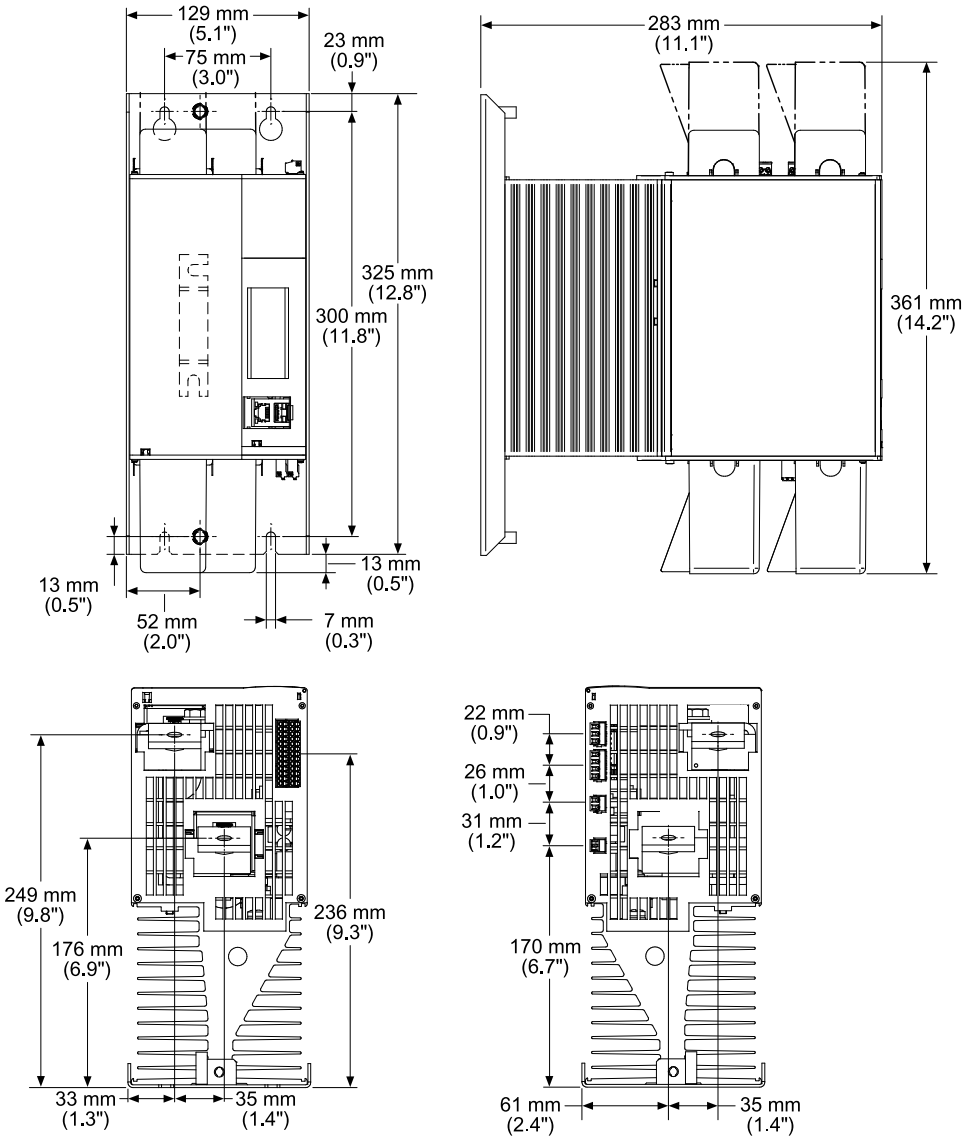


*Figure 5-5. Thyro-AX 1A 130 H, 170 H*

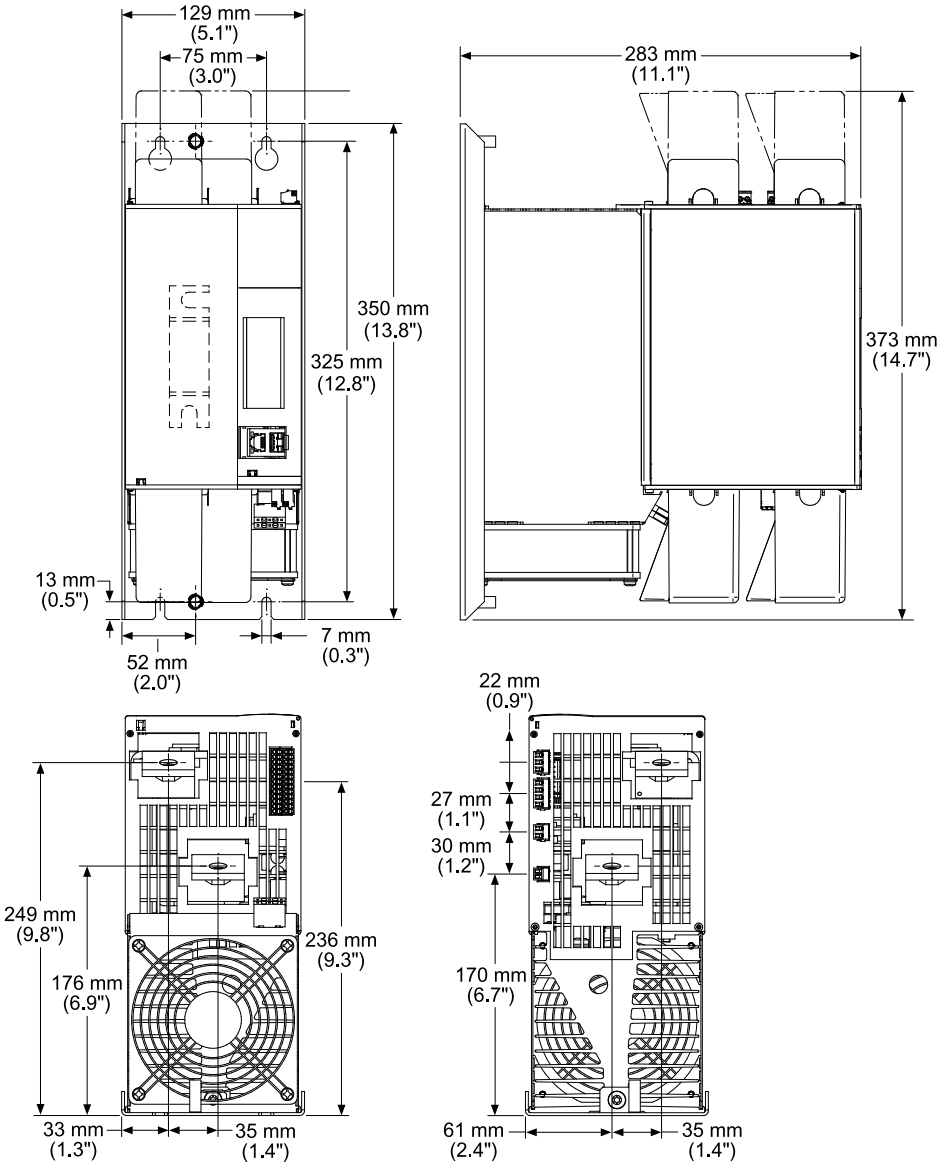


***Figure 5-6.*** *Thyro-AX 1A 230 HF, 240 HF, 280 HF, 350 HF*

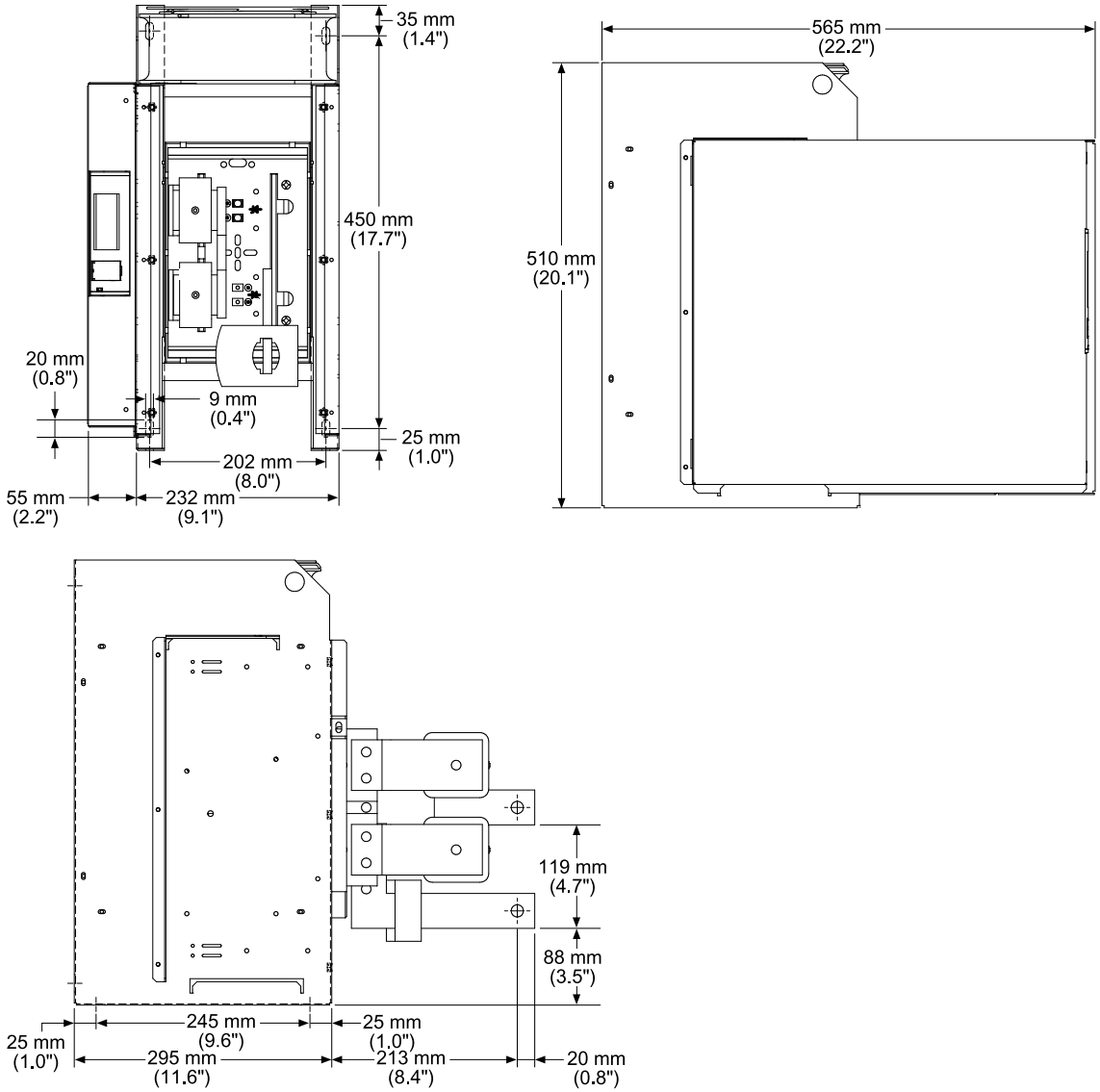


*Figure 5-7. Thyro-AX 1A 1000 HF*

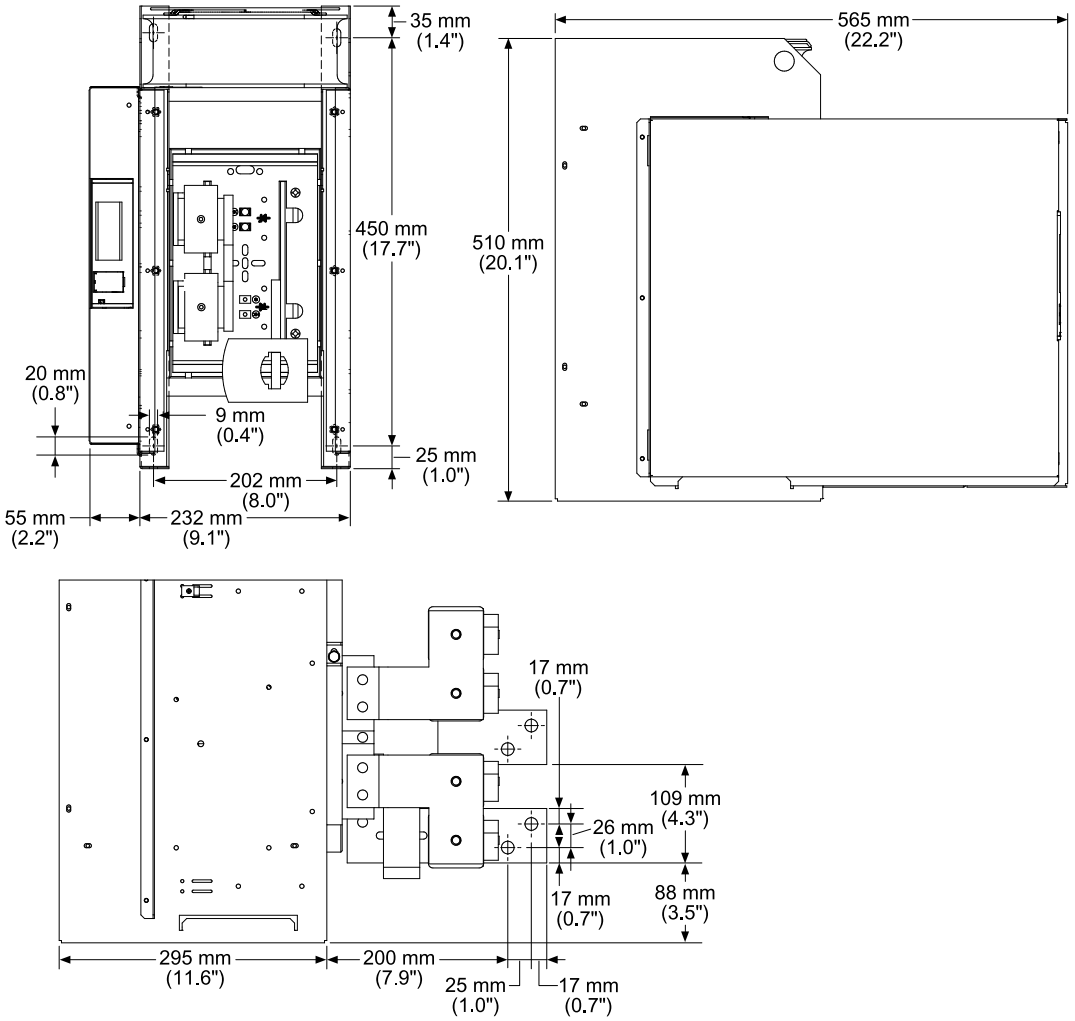


*Figure 5-8. Thyro-AX 1A 1400 HF, 1500 HF*

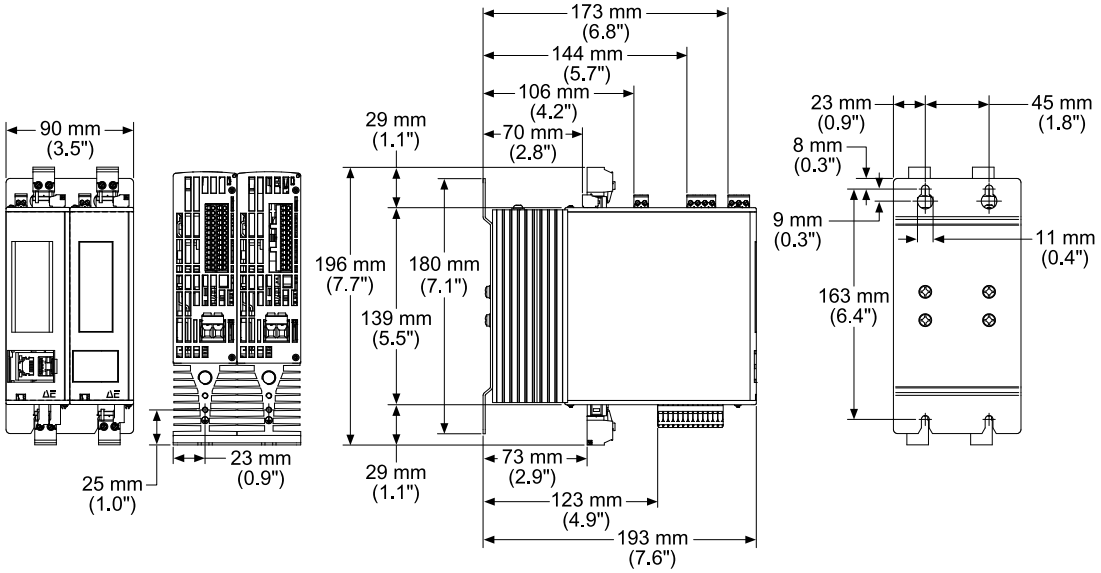


*Figure 5-9. Thyro-AX 2A 16 H*

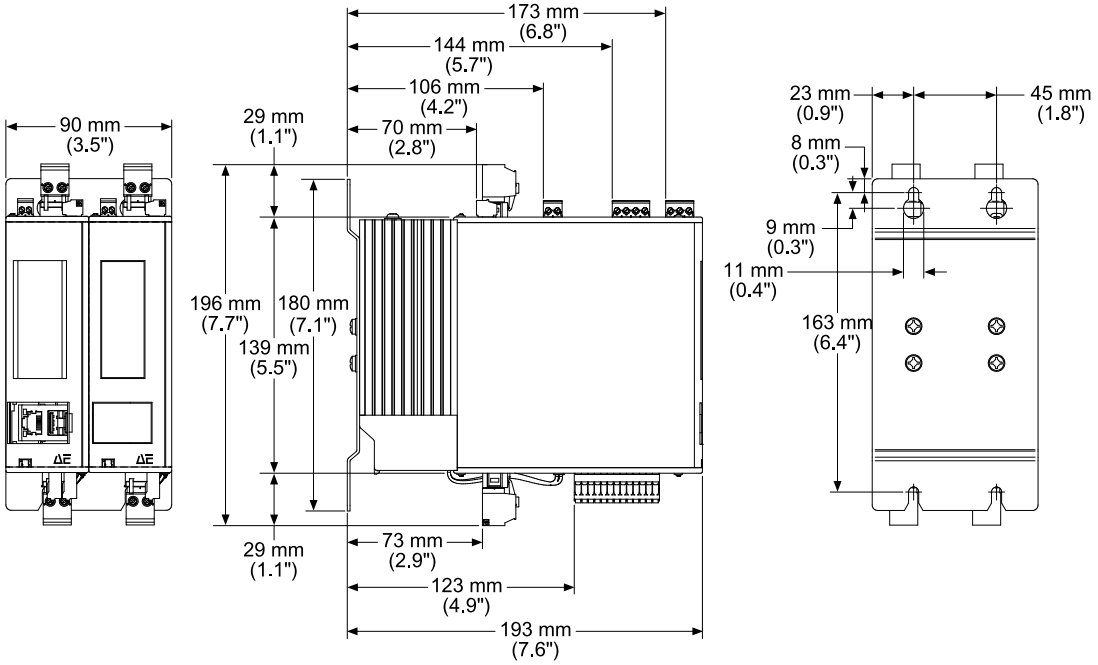


*Figure 5-10.* *Thyro-AX 2A 30 H*

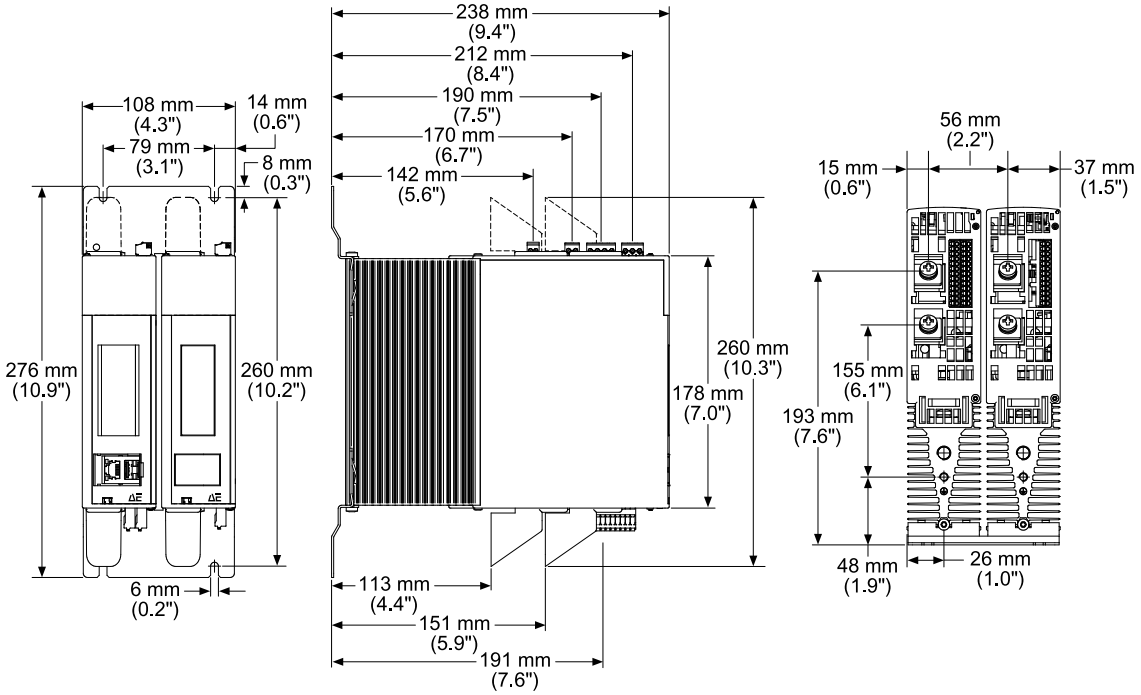


*Figure 5-11.* *Thyro-AX 2A 45 H, 60 H*

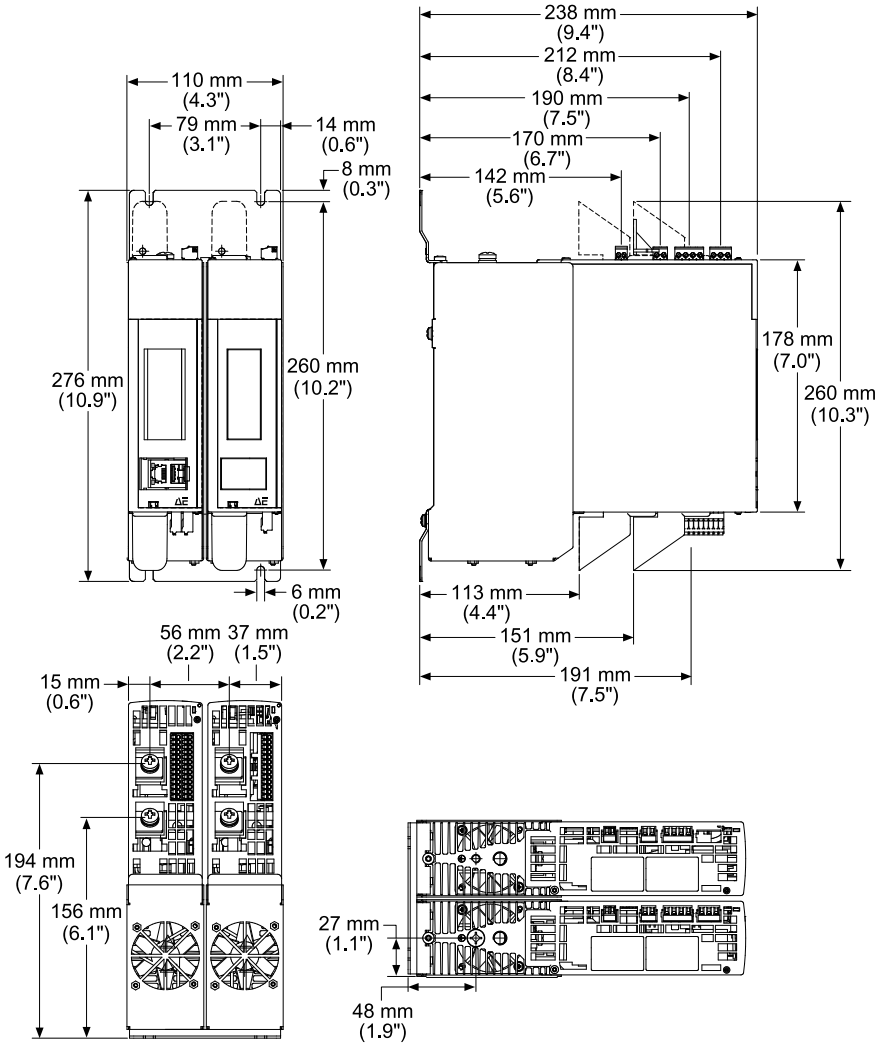


*Figure 5-12. Thyro-AX 2A 100 H*

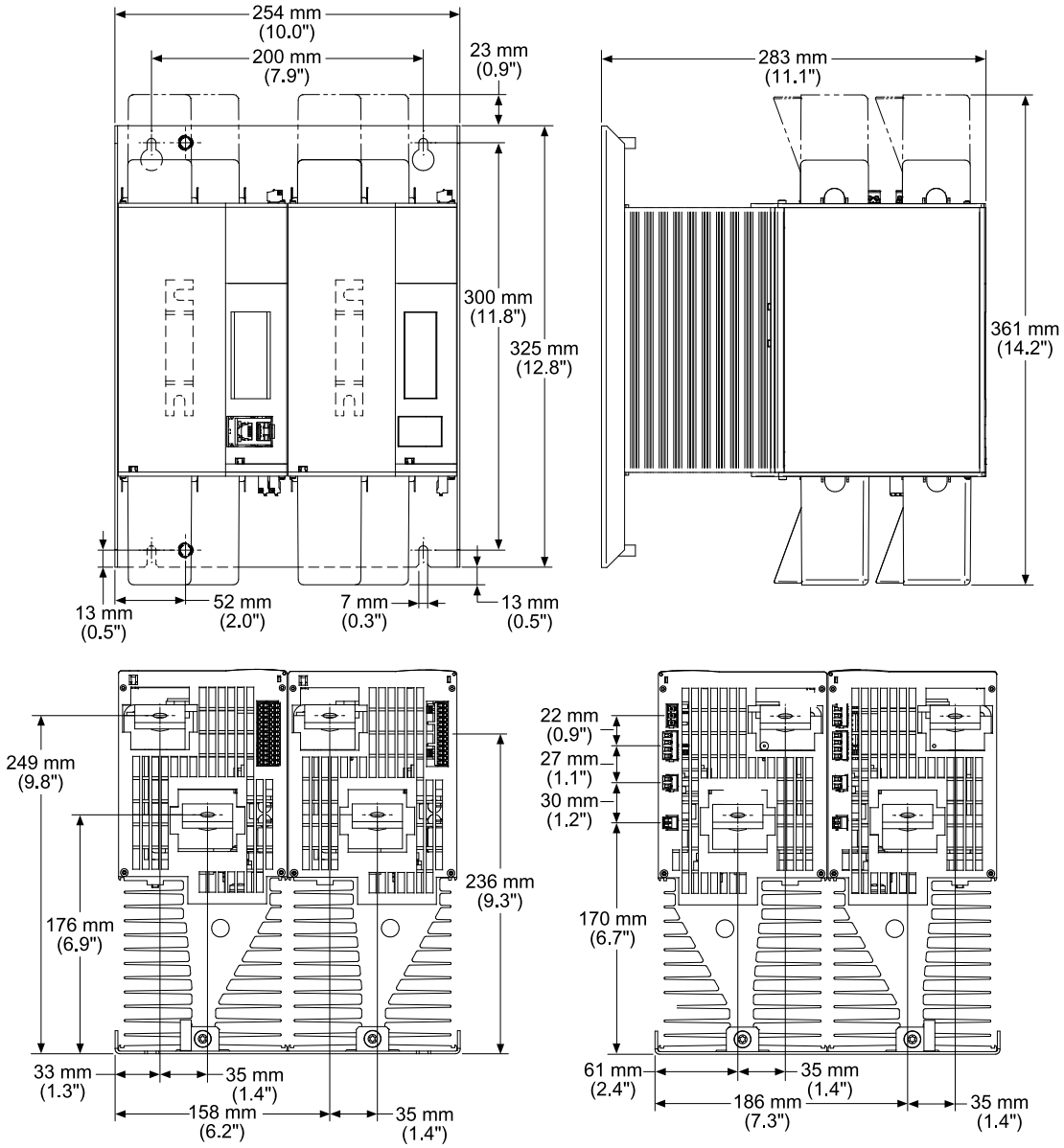


***Figure 5-13.*** *Thyro-AX 2A 130 H, 170 H*

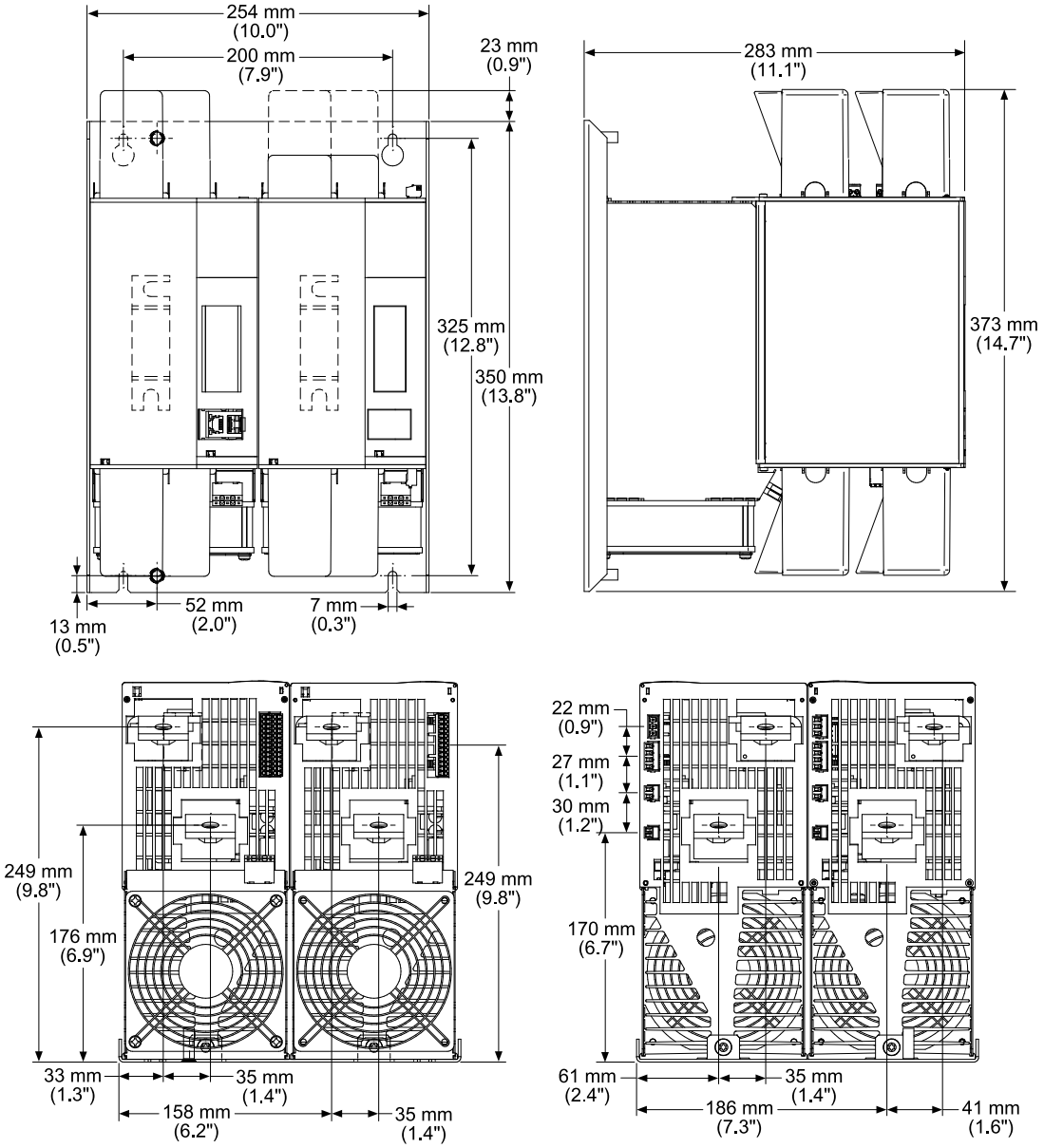


*Figure 5-14. Thyro-AX 2A 230 HF, 240 HF, 280 HF, 350 HF*

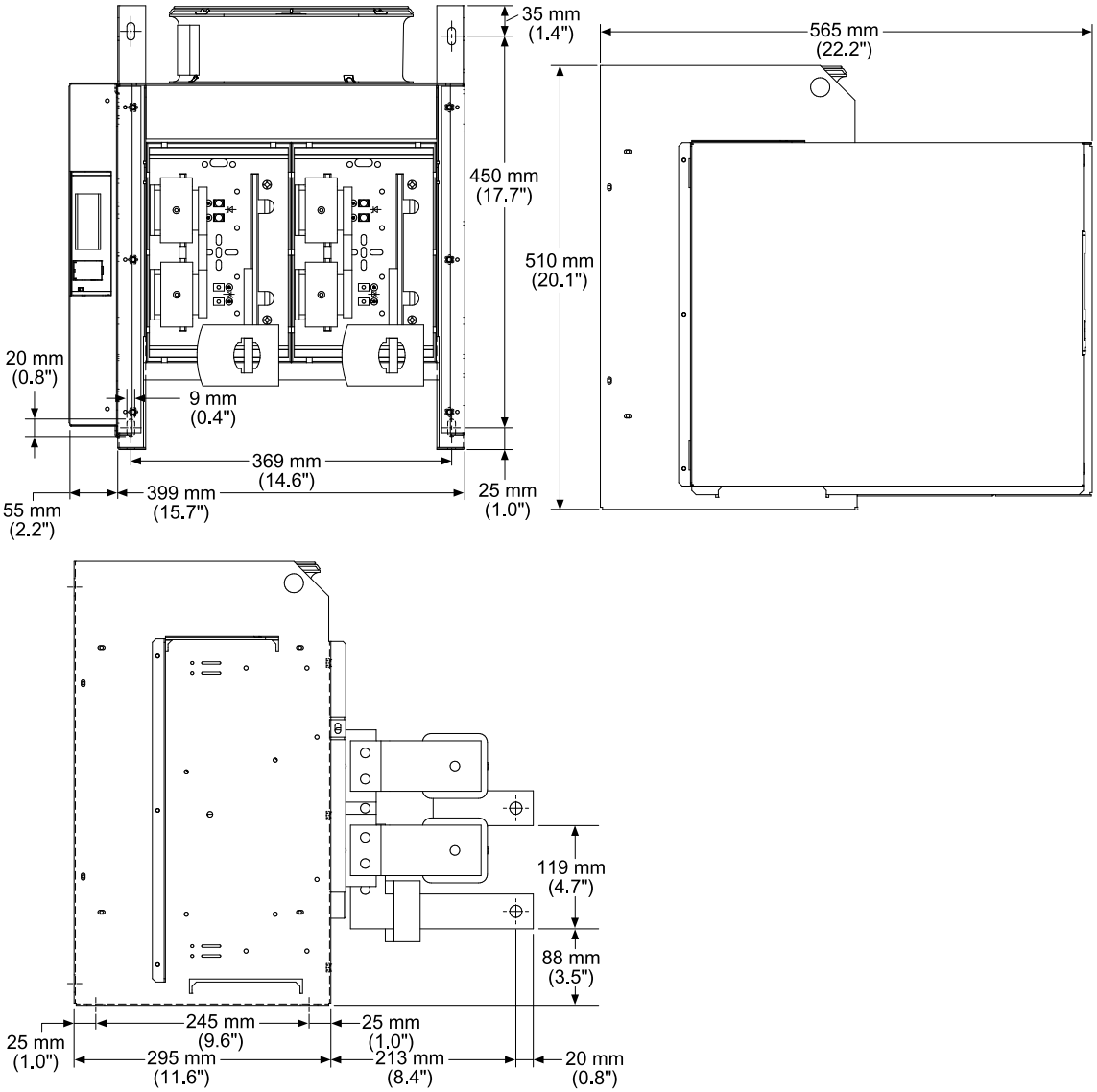


*Figure 5-15. Thyro-AX 2A 1000 HF*

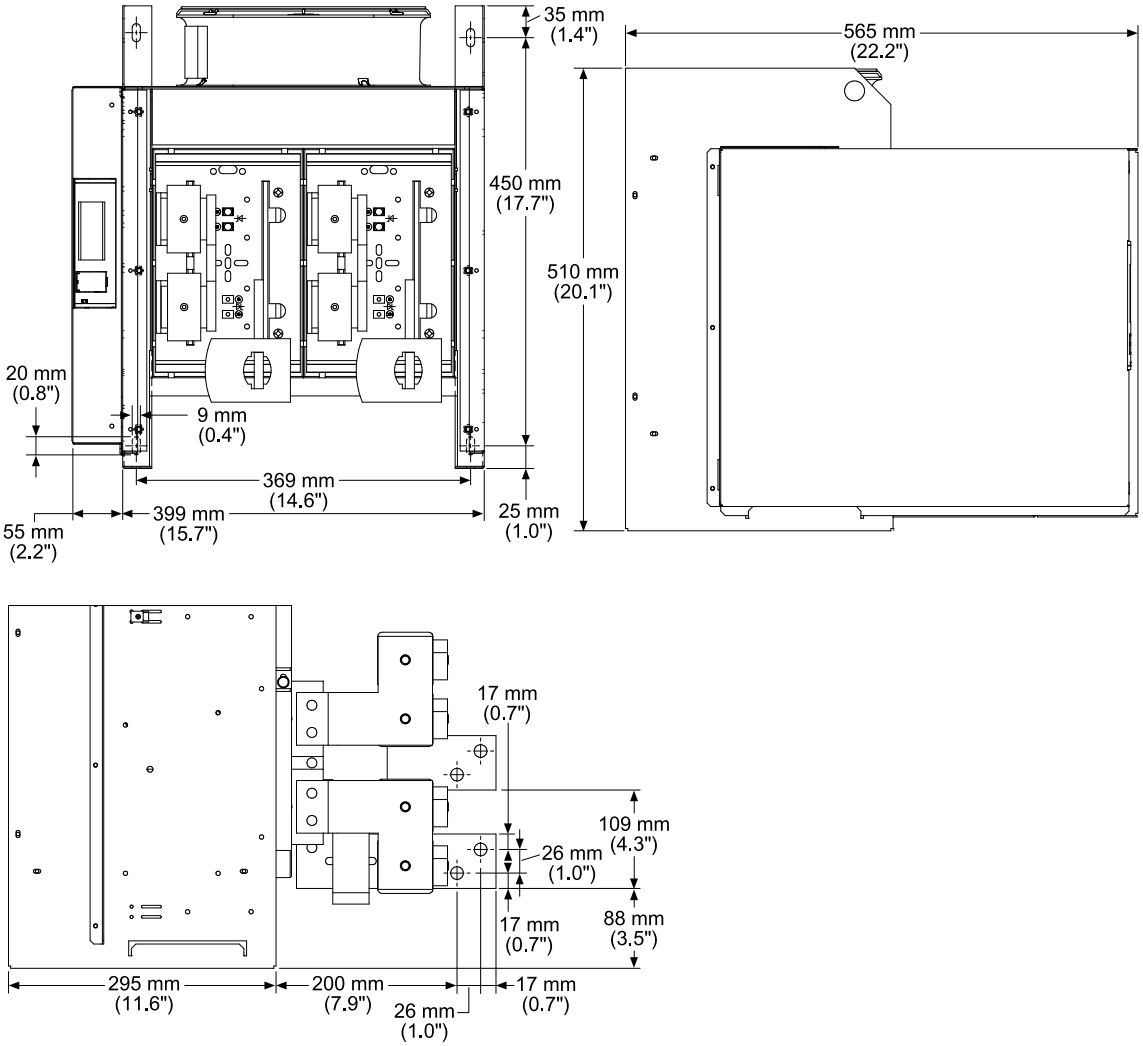


*Figure 5-16. Thyro-AX 2A 1400 HF, 1500 HF*

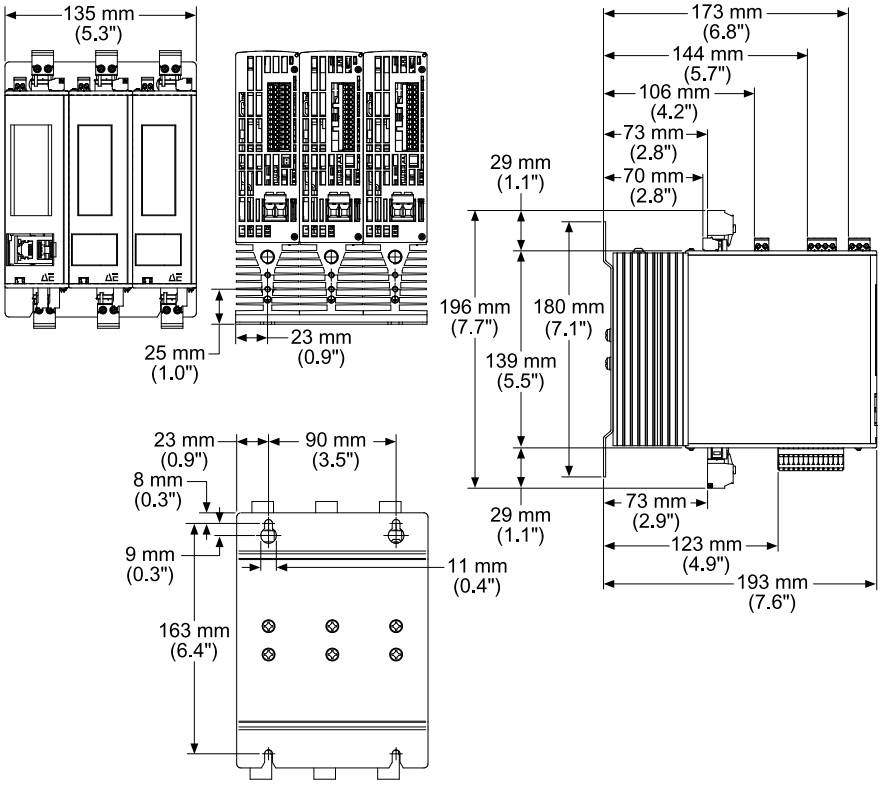


*Figure 5-17. Thyro-AX 3A 16 H*

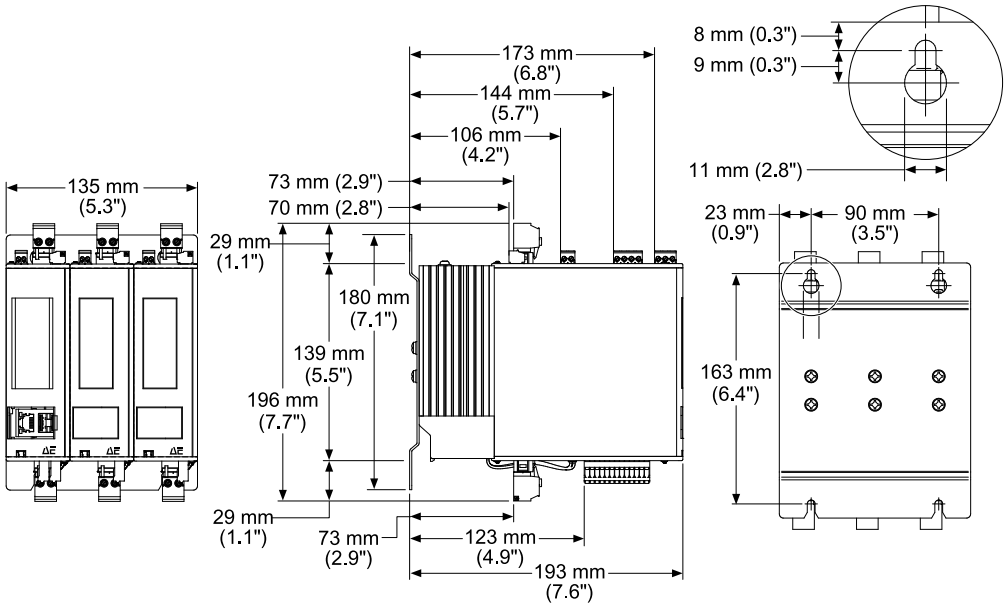


*Figure 5-18. Thyro-AX 3A 30 H*

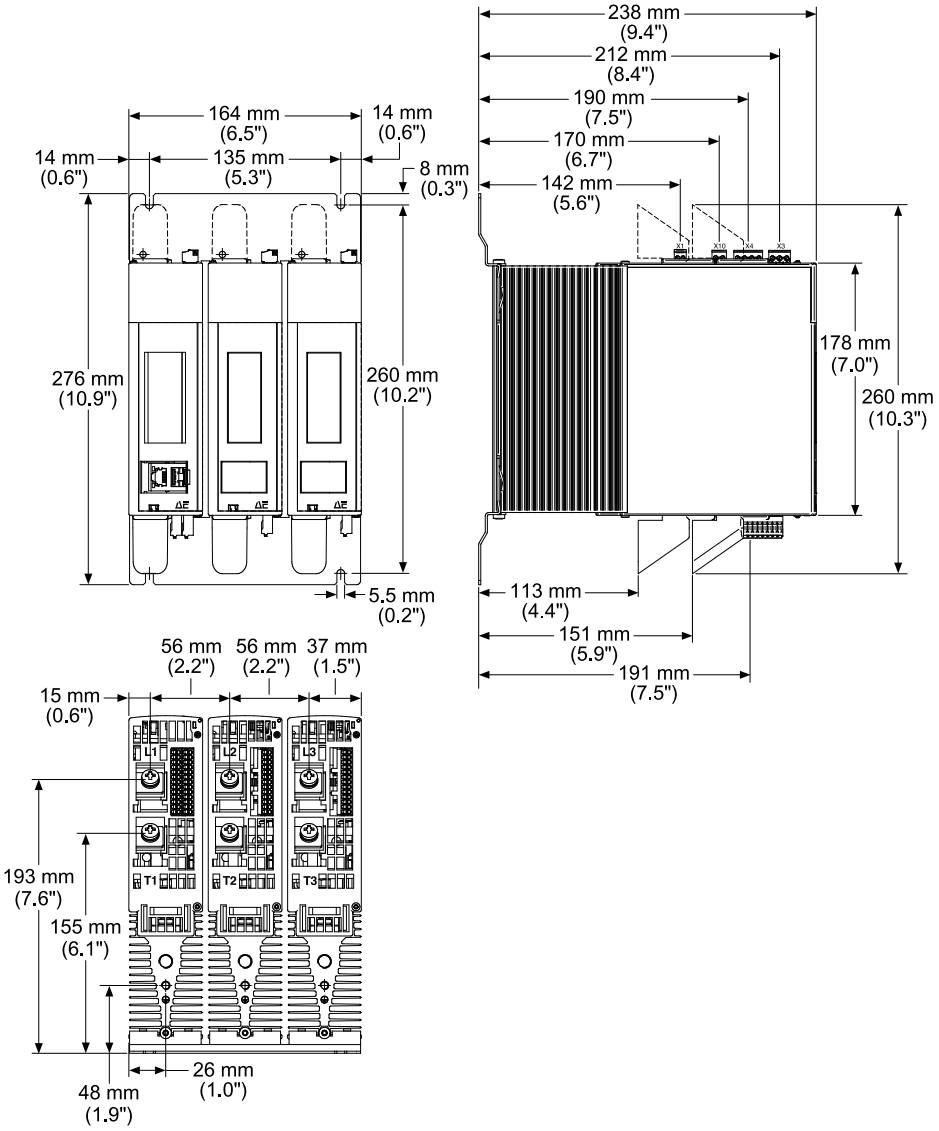


*Figure 5-19. Thyro-AX 3A 45 H, 60 H*

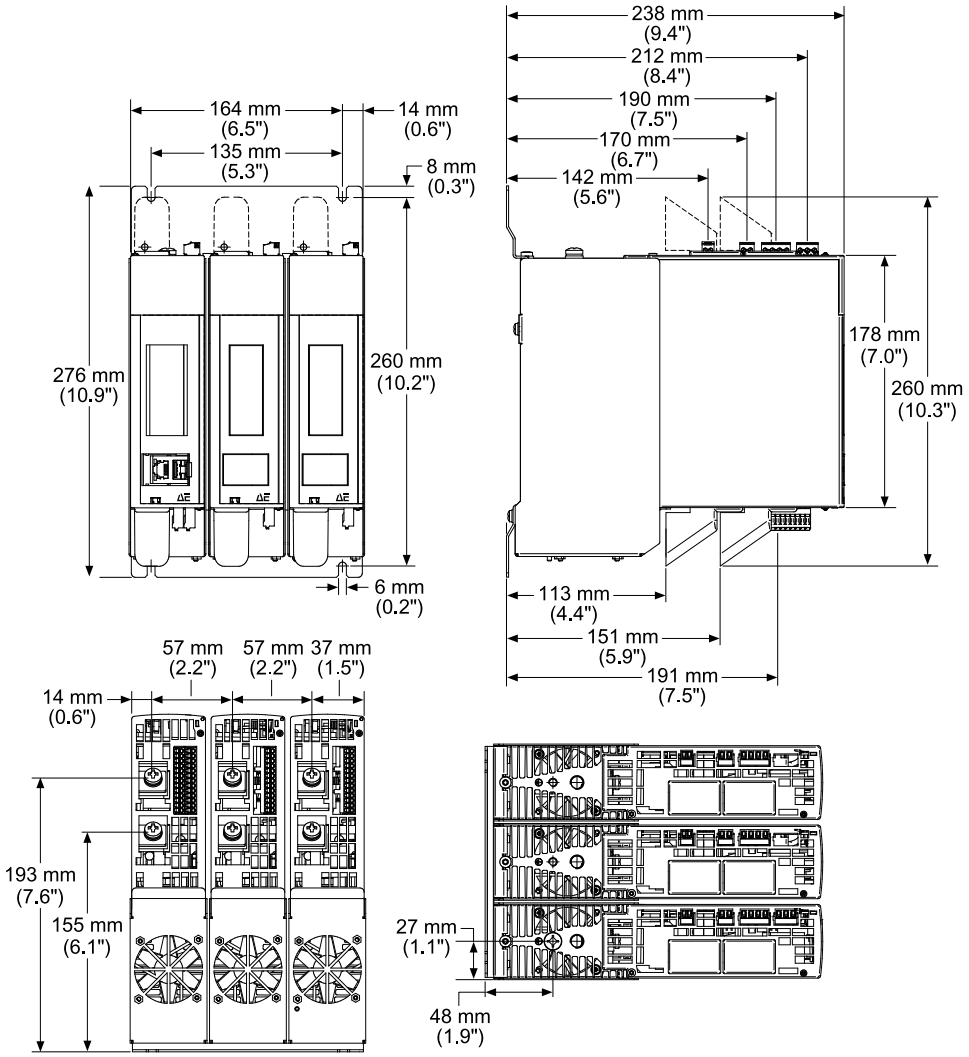


*Figure 5-20. Thyro-AX 3A 100 H*

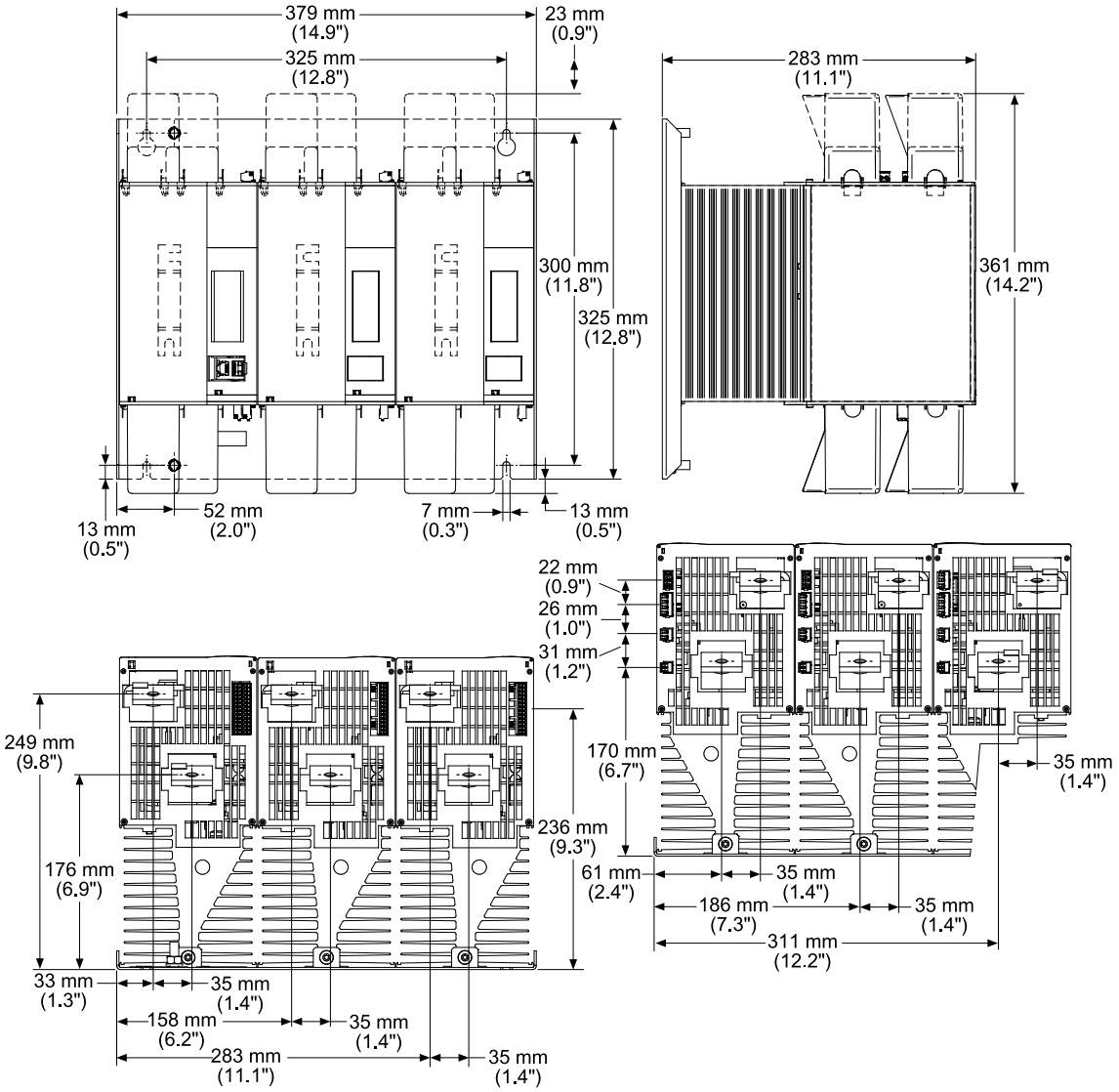


*Figure 5-21. Thyro-AX 3A 130 H, 170 H*

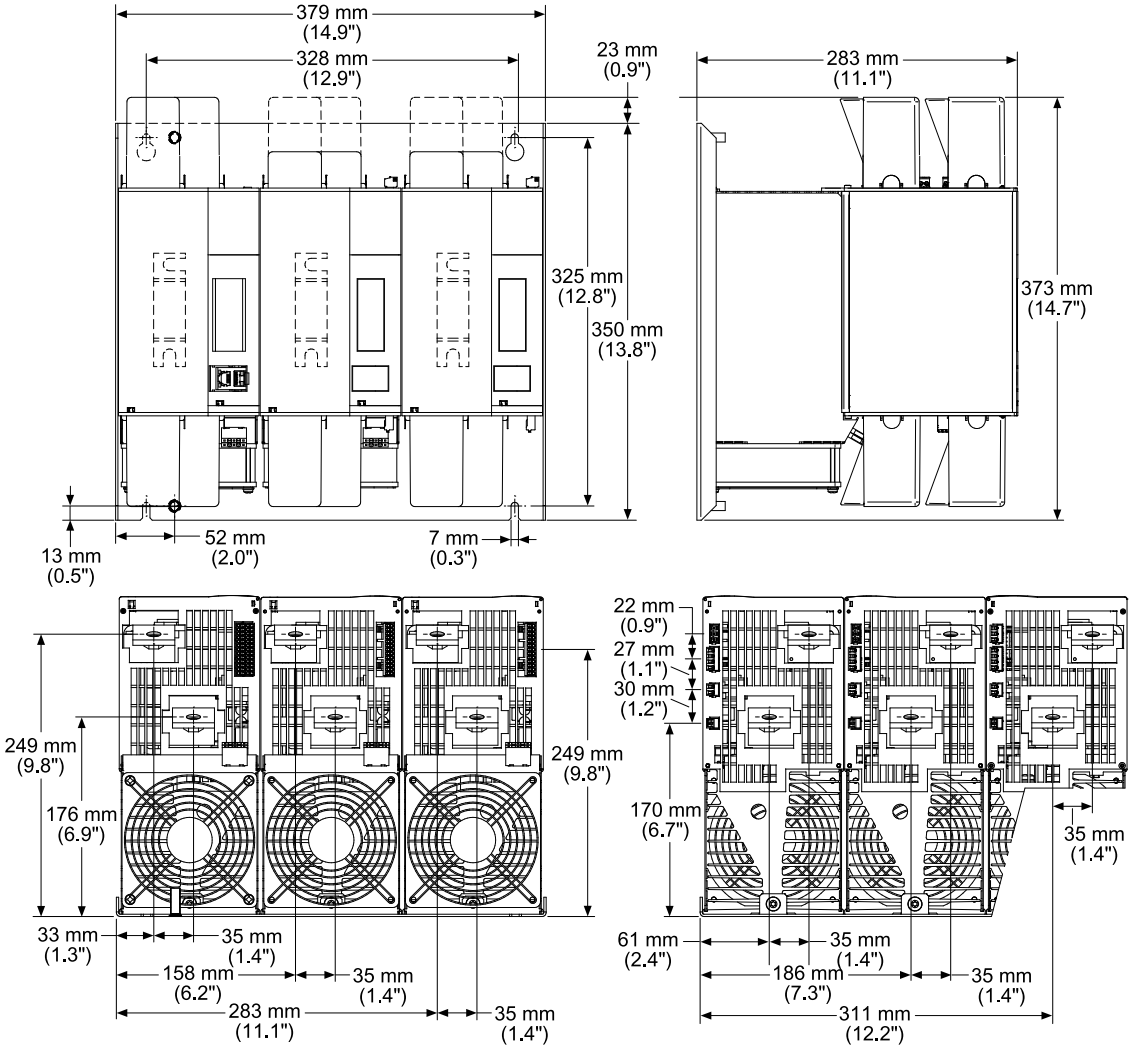


*Figure 5-22. Thyro-AX 3A 230 HF, 240 HF, 280 HF, 350 HF*

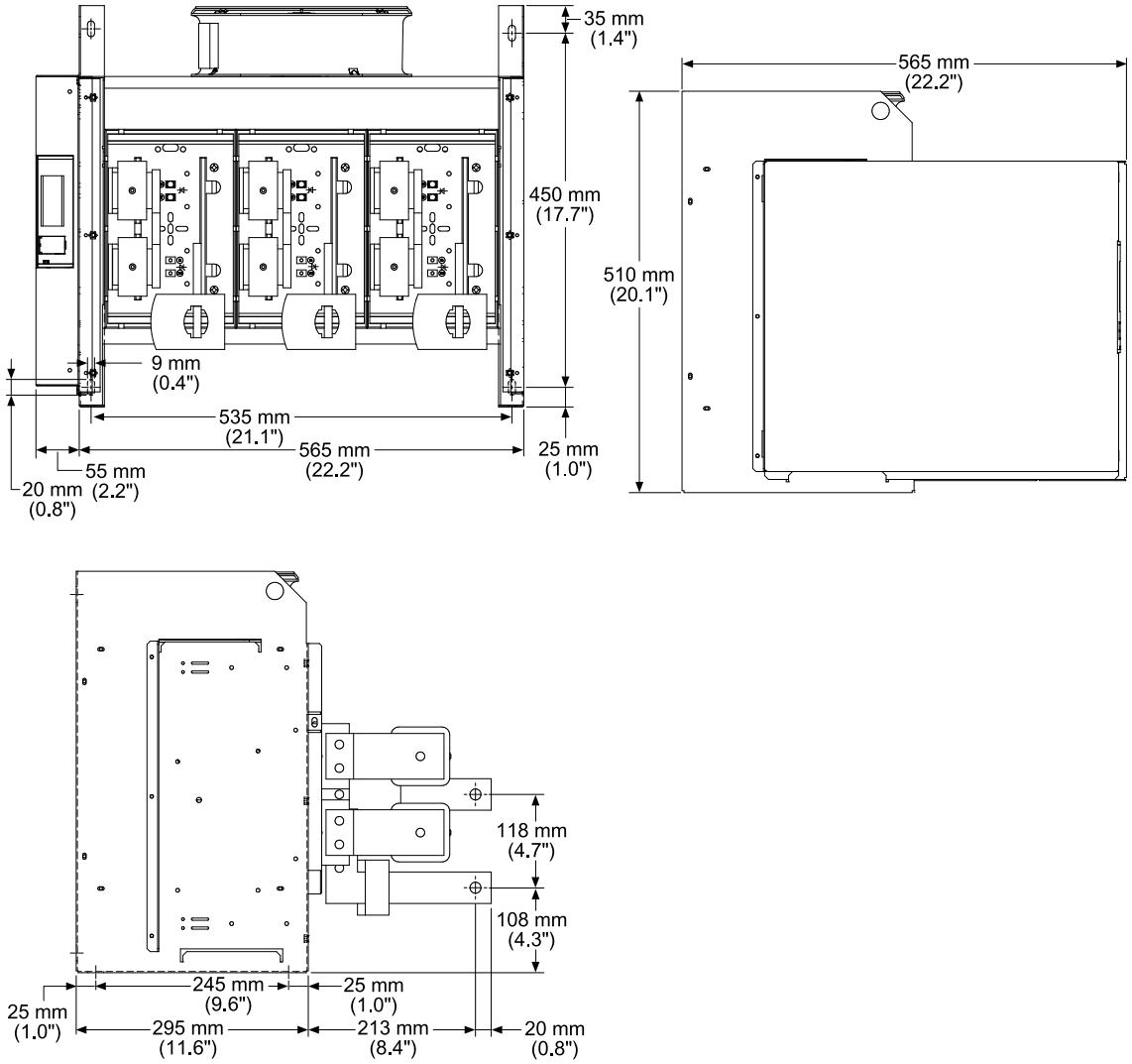


*Figure 5-23. Thyro-AX 3A 1000 HF,*

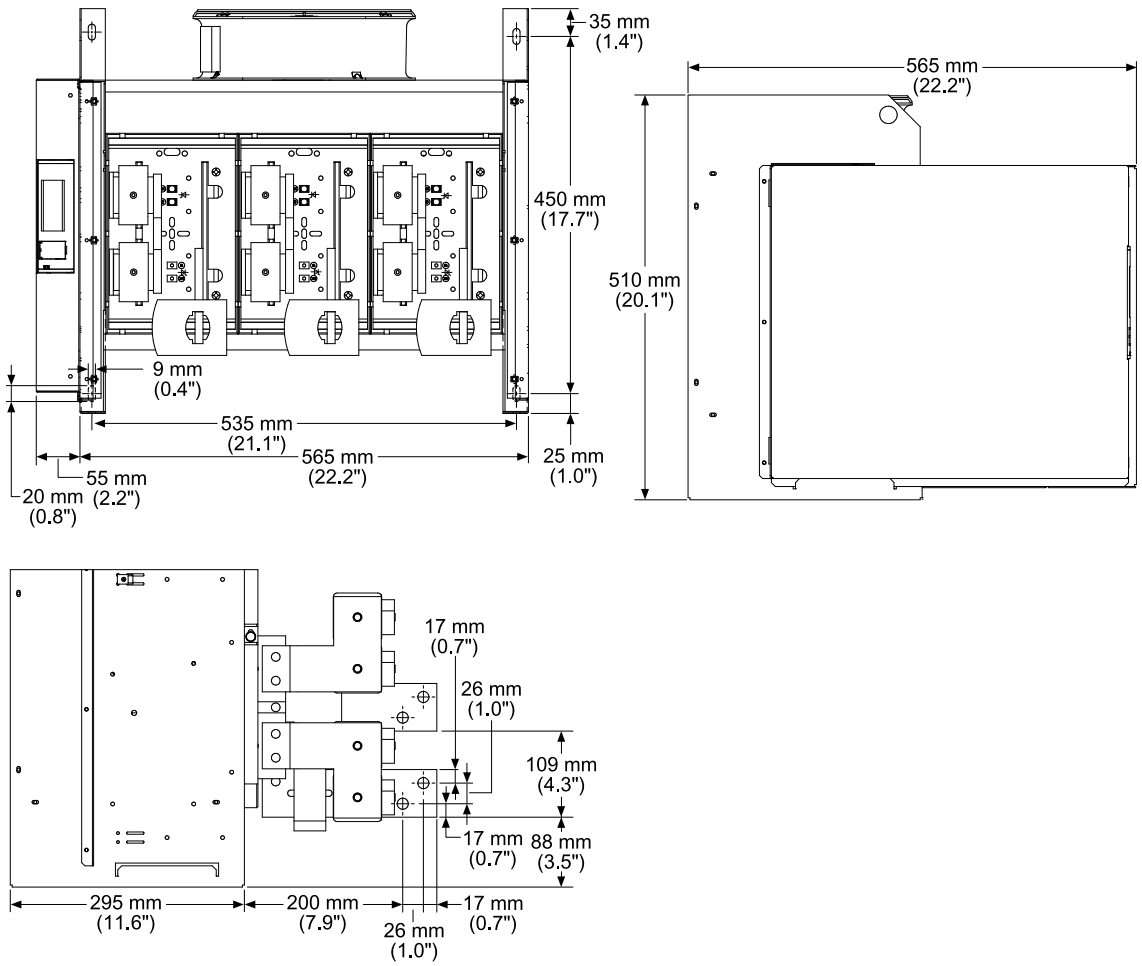


*Figure 5-24. Thyro-AX 3A 1400 HF, 1500 HF*

# Installation Requirements

Install this unit according to the following requirements.

**DANGER:**

RISK OF DEATH OR BODILY INJURY. Disconnect and lockout/tagout all sources of input power before working on this unit or anything connected to it.

**DANGER:**

RISQUE DE MORT OU DE BLESSURES. Débrancher et verrouiller/étiqueter toutes les sources de puissance d'entrée avant de travailler sur cet appareil ou sur tout élément qui y est raccordé.

**DANGER:**

Personnel must receive proper training before installing or troubleshooting high-energy electrical equipment. Potentially lethal voltages could cause death, serious personal injury, or damage to the equipment. Ensure that all appropriate safety precautions are taken.

**DANGER:**

Le personnel devra être correctement formé avant de pouvoir installer ou dépanner des équipements électriques à haute énergie. Des tensions potentiellement létales peuvent entraîner le décès, des blessures ou des dommages à l'équipement. Assurez-vous de prendre toutes les précautions de sécurité appropriées.

## Unpacking the Unit

1. Unpack and inspect the unit carefully, looking for obvious physical damage.
2. If no damage is apparent, proceed with the unit installation and setup.
3. If you do see signs of shipping damage, contact Advanced Energy and the carrier immediately.

   Save the shipping container for submitting necessary claims to the carrier.

## Lifting the Unit

This manual describes many Thyro-AX models. Use appropriate lifting techniques and tools based on the size and weight of the unit.

**CAUTION:**

The module is heavy. Use two people to lift the module.

**ATTENTION:**

Le module est lourd. Il doit être soulevé par deux personnes.

### TO LIFT THE UNIT

- Lift the unit by holding on to the front of the unit while also supporting the rear of the unit.

# INSTALLING THE UNIT

## Mounting the Unit

1. Install the unit on or in the mounting surface, rack, or cabinet.
2. Fasten the unit to the mounting surface, rack, or cabinet. Use suitable fasteners.

See "Dimensional Drawings" on page 5-1 for mounting hole details.

## Grounding

**WARNING:**

Do not attempt to turn on power until the chassis of the unit is tied to a local earth ground through a copper grounding strap that is sized in accordance with applicable requirements.

**AVERTISSEMENT:**

Ne pas essayer de mettre l'unité sous tension avant que son ossature ne soit reliée à une mise à la terre locale à l'aide d'un bracelet de mise à la terre en cuivre dont les dimensions sont conformes aux exigences applicables.

- Make a suitable chassis ground connection to the location specified on the dimensional drawing. See "Dimensional Drawings" on page 5-1.

## Connecting I/O and Auxiliary Connectors

**DANGER:**

RISK OF DEATH OR BODILY INJURY. Disconnect and lockout/tagout all sources of input power before working on this unit or anything connected to it.

**DANGER:**

RISQUE DE MORT OU DE BLESSURES. Débrancher et verrouiller/étiqueter toutes les sources de puissance d'entrée avant de travailler sur cet appareil ou sur tout élément qui y est raccordé.

☞ **Important**

All digital and analog control cables must be shielded. Connect the cable shields to the shield terminal on the unit.

The following signals are always required for operation of the device: *SETPOINT*, *PULSE LOCK*.

Complete the following steps to connect each control cable required for your installation. A plug-in, screw-terminal block is provided for each control connector.

1. Verify that the control cable conductors are sized between 0.14 $mm^2$ and 1.5 $mm^2$ (30 AWG and 14 AWG).
2. Prepare the end of the control cable:
   a. Strip 50 mm (2″) of the cable jacket.
   b. Prepare the cable shield for connection to the shield terminal.
   c. Strip 7 mm (0.28″) of insulation from each conductor.
3. Connect each conductor to the plug-in, screw-terminal block.
4. Connect the cable shield to the shield terminal, X2.10.
5. Plug the block into the power controller.

### Related Links

- "Analog and Digital I/O" on page 4-7

## Connecting Load and Auxiliary Power

**DANGER:**

RISK OF DEATH OR BODILY INJURY. Disconnect and lockout/tagout all sources of input power before working on this unit or anything connected to it.

**DANGER:**

RISQUE DE MORT OU DE BLESSURES. Débrancher et verrouiller/étiqueter toutes les sources de puissance d'entrée avant de travailler sur cet appareil ou sur tout élément qui y est raccordé.

**WARNING:**

This device must be installed so that the output power connection is inaccessible to the user.

**AVERTISSEMENT:**

Le dispositif doit être installé de façon à ce que l'utilisateur ne puisse accéder à la connexion de puissance de sortie.

This task applies to all units. Three-phase units will have three mains input terminals and three load terminals. Two-phase and 1-phase units will have two sets or one set of mains terminals and load terminals, and will require a reference phase connection to connector **X1**, as shown in the connection diagram (see "Connection Diagrams" on page 5-29).

## TO CONNECT LOAD AND AUXILIARY POWER

1. Press on the retaining clip on the front of the unit(s), and slide the plastic cover(s) forward to remove.
2. Verify that the Protective Earth ground conductor is connected.
3. Connect each phase of the mains supply to the mains terminal (**L1**, **L2**, **L3**).

   ☞ **Important**
   A clockwise rotating field is required. The mains terminals are labeled **1** on units with less than a 45 A current rating.

   a. Use the screw size specified in Table 5-1.

   b. Tighten to the torque specified in Table 5-2.
4. Connect each phase of the load to the load terminals (**T1**, **T2**, **T3**).

   ☞ **Important**
   The load terminals are labeled **2** on units with less than a 45 A current rating.

   a. Use the screw size specified in Table 5-1.

   b. Tighten to the torque specified in Table 5-2.
5. Connect a current-limited 85 VAC to 265 VAC (30 W, 81 VA maximum) external power source to the auxiliary power input connector, **X4**, on the top of the unit.
6. For 1-phase and 2-phase units only, connect terminal **X1.1** on the top of the unit:

   - To the neutral conductor (1-phase units)
   - To the mains side of L2 through an external 2 A fuse (1-phase or 2-phase units)

   An external 2 A fuse might be required. Use the included plug-in, screw-terminal block to make this connection. Do not alter any existing factory wiring connected to this terminal block.
7. Reinstall the plastic cover(s) removed for step 1.

*Table 5-1. Terminal screw size*

| Model | Connector Screw | Protective Earth Screw |
|---|---|---|
| 16 A, 30 A | Lug, M4 | Lug, M4 |
| 45 A, 60 A, 100 A | M6 | M6 |
| 130 A, 170 A, 230 A | M8 | M10 |
| 240 A, 280 A, 350 A, 495 A, 650 A | M10 | M10 |
| 1000 A, 1400 A, 1500 A | M12 | M12 |

*Table 5-2. Terminal screw torque*

| Screw | Torque | | |
|---|---|---|---|
| | Minimum NM (Pound-Inches) | Rated NM (Pound-Inches) | Maximum NM (Pound-Inches) |
| M2 | 0.2 (1.9) | 0.25 (2.2) | 0.3 (2.5) |
| M4 | 1.0 (8.9) | 1.3 (11.5) | 1.7 (15.0) |
| M6 | 3.0 (26.1) | 4.4 (38.9) | 5.9 (52.2) |
| M8 | 11.5 (101.8) | 17.0 (150.5) | 22.5 (199.1) |
| M10 | 22.0 (194.7) | 33.0 (292.1) | 44.0 (389.4) |
| M12 | 38.0 (336.3) | 56.0 (495.6) | 75.0 (663.8) |

## CONFIGURING THE LOAD

**DANGER:**

RISK OF DEATH OR BODILY INJURY. Disconnect and lockout/tagout all sources of input power before working on this unit or anything connected to it.

**DANGER:**

RISQUE DE MORT OU DE BLESSURES. Débrancher et verrouiller/étiqueter toutes les sources de puissance d'entrée avant de travailler sur cet appareil ou sur tout élément qui y est raccordé.

For some load configurations, the wiring to **X1** and **X10** must be modified in accordance with the appropriate connection diagram (see "Connection Diagrams" on page 5-29).

- Star or delta connection without N: Factory setting, no changes necessary
- Star connection with N: Changes of wiring of X1 and X10 necessary

- Open delta connection: Changes of wiring of X1 and X10 necessary

After changing the wiring, the load parameters must be modified using the touch display, the Thyro-Tool Pro software, or an acyclic communication of a bus protocol.

The general functionality of the touch display is explained in "Touch Display" on page 4-13. If the load configuration has not previously been set up via EasyStart, or has not yet been changed, the modification can be done in accordance to the following set of display screens:

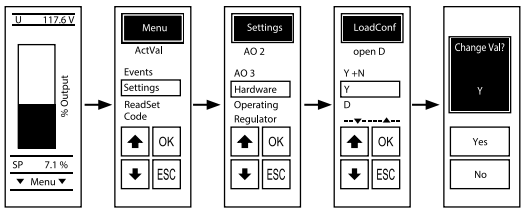


*Figure 5-25. Load configuration*

To configure the load using the Thyro-Tool Pro software, press **Settings→ Hardware→ LoadConf→** .

- **Star or delta connection without N** (factory setting)
- **Open delta connection**
- **Star connection with N** (only Thyro-AX 3A)

Save the new configuration to the unit.

## Installing IP20 Protection

**DANGER:**

RISK OF DEATH OR BODILY INJURY. Disconnect and lockout/tagout all sources of input power before working on this unit or anything connected to it.

**DANGER:**

RISQUE DE MORT OU DE BLESSURES. Débrancher et verrouiller/étiqueter toutes les sources de puissance d'entrée avant de travailler sur cet appareil ou sur tout élément qui y est raccordé.

**WARNING:**

This device must be installed so that the output power connection is inaccessible to the user.

**AVERTISSEMENT:**

**Le dispositif doit être installé de façon à ce que l'utilisateur ne puisse accéder à la connexion de puissance de sortie.**

The Thyro-AX is designed to meet the IP20 protection code requirements. To ensure protection during operation, it is necessary to install the added protection devices at each electric connection. The following illustrations show how to install the protection devices. This handling also applies to 2- or 3-phase Thyro-AX units.

## 45 A, 60 A, AND 100 A DEVICES

For non-used connections:

1. Insert the blind cover for non-used connections into the plug-in edge at the front top of the device.
2. Press the back part of the blind cover into the device cover until it snaps into place.

For used connections where a cable is connected:

1. Place the protection cover with its plug-in edge in the direction of the device and be placed at the cable with its semicircle gap.
2. Push the whole backplate over the sideways rails towards the cover.
3. Hook the protection cover with its plug-in edge into the front hole.
4. Press the back part of the cover into the device cover until it snaps into place.

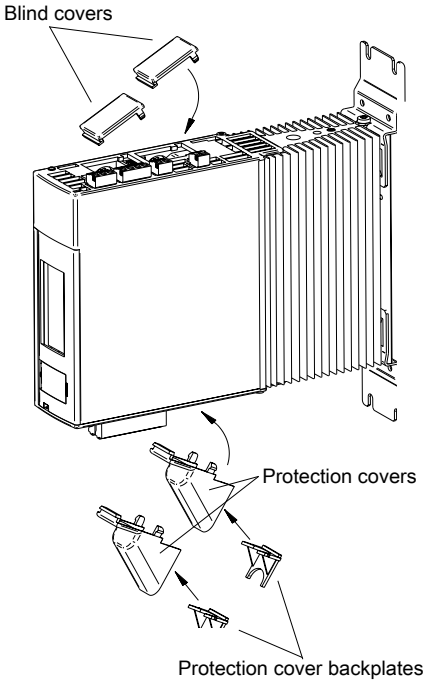


*Figure 5-26. IP 20 protection, 45 A through 100 A*

☞ **Important**
If the top and bottom connections are used at the same time, both backplate protection covers must be mounted.

For 100 A devices, the rear backplate protection cover cannot be mounted due to interference with the fuse cover. This is only the case when the device is connected from below.

## 130 A, 170 A, 240 A, 280 A, AND 350 A DEVICES

For non-used connections:

1. Insert the blind cover for non-used connections into the plug-in edge of the device

For used connections where a cable is connected:

1. Mount the protection covers according to the direction arrows in the following figure
2. If the customer used connections are wider than the standard gaps used for these protection covers, adjust the cover to the given gaps.

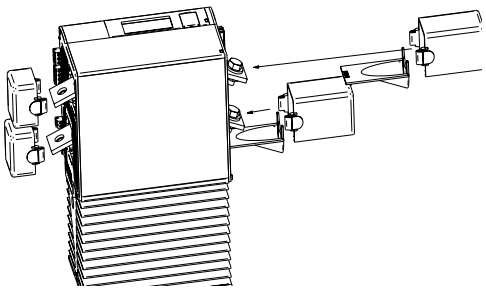

*Figure 5-27. IP20 protection, 130 A through 350 A*

## 1000 A, 1400 A, AND 1500 A DEVICES

1. Remove the front, top, and bottom covers.
2. Connect the source and load conductors to the copper bars in the unit.
3. Use a side cutter to remove cover material to clear the conductors.

   ☞ **Important**
   To assure adequate IP20 protection, remove the minimum amount of cover material.

4. Attach the covers to the unit.

The following figure shows an example of cover placement.

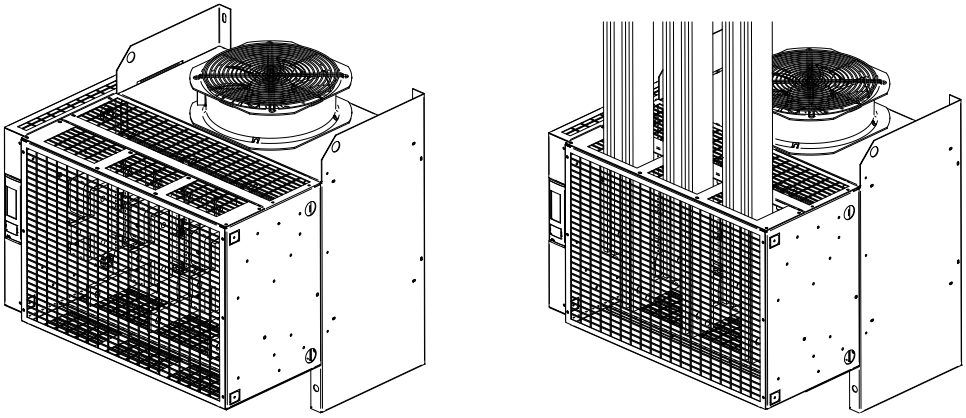

*Figure 5-28. IP20 protection, 1000 A through 1500 A*

## Connection Diagrams

**DANGER:**

RISK OF DEATH OR BODILY INJURY. Disconnect and lockout/tagout all sources of input power before working on this unit or anything connected to it.

**DANGER:**

RISQUE DE MORT OU DE BLESSURES. Débrancher et verrouiller/étiqueter toutes les sources de puissance d'entrée avant de travailler sur cet appareil ou sur tout élément qui y est raccordé.

**WARNING:**

More than one live circuit. See diagram.

**AVERTISSEMENT:**

Plus d'un circuit est sous tension. Voir schéma.

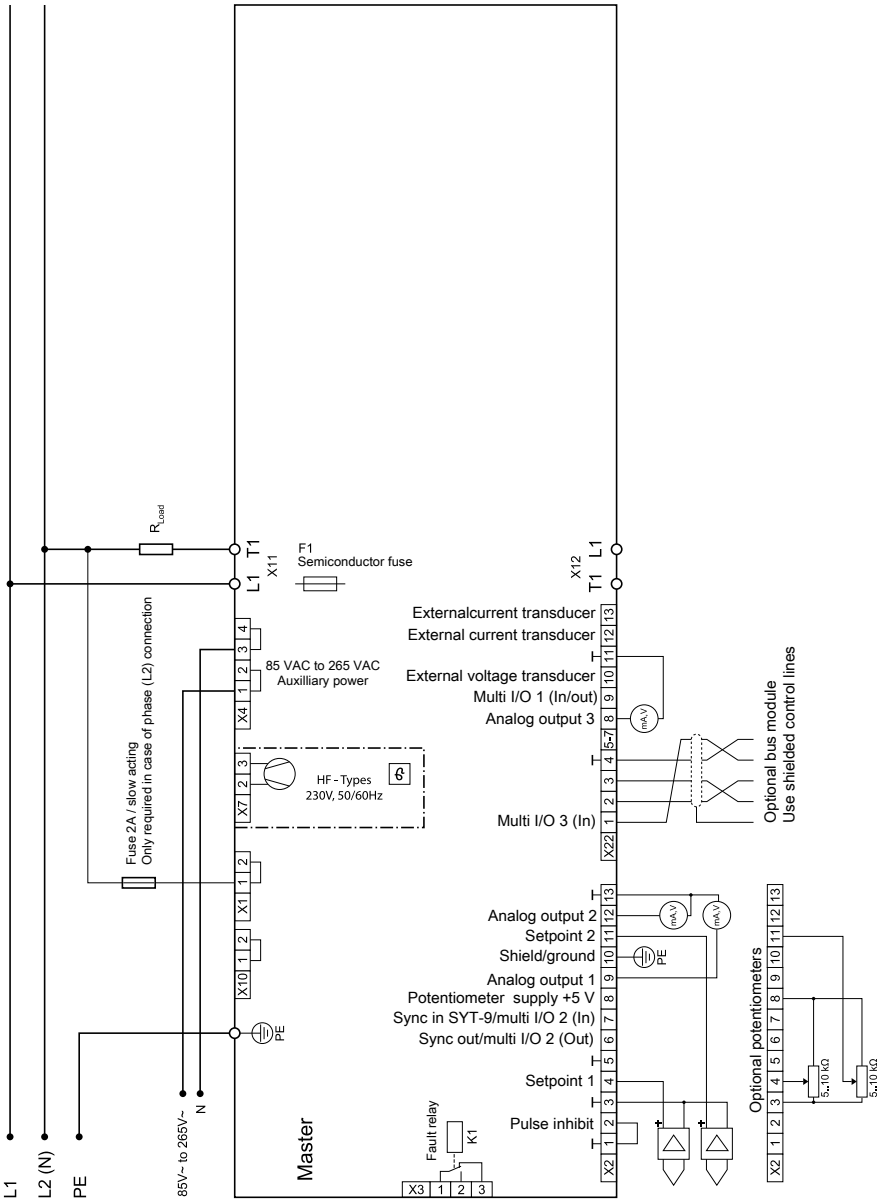


*Figure 5-29. 1A power controller connections*

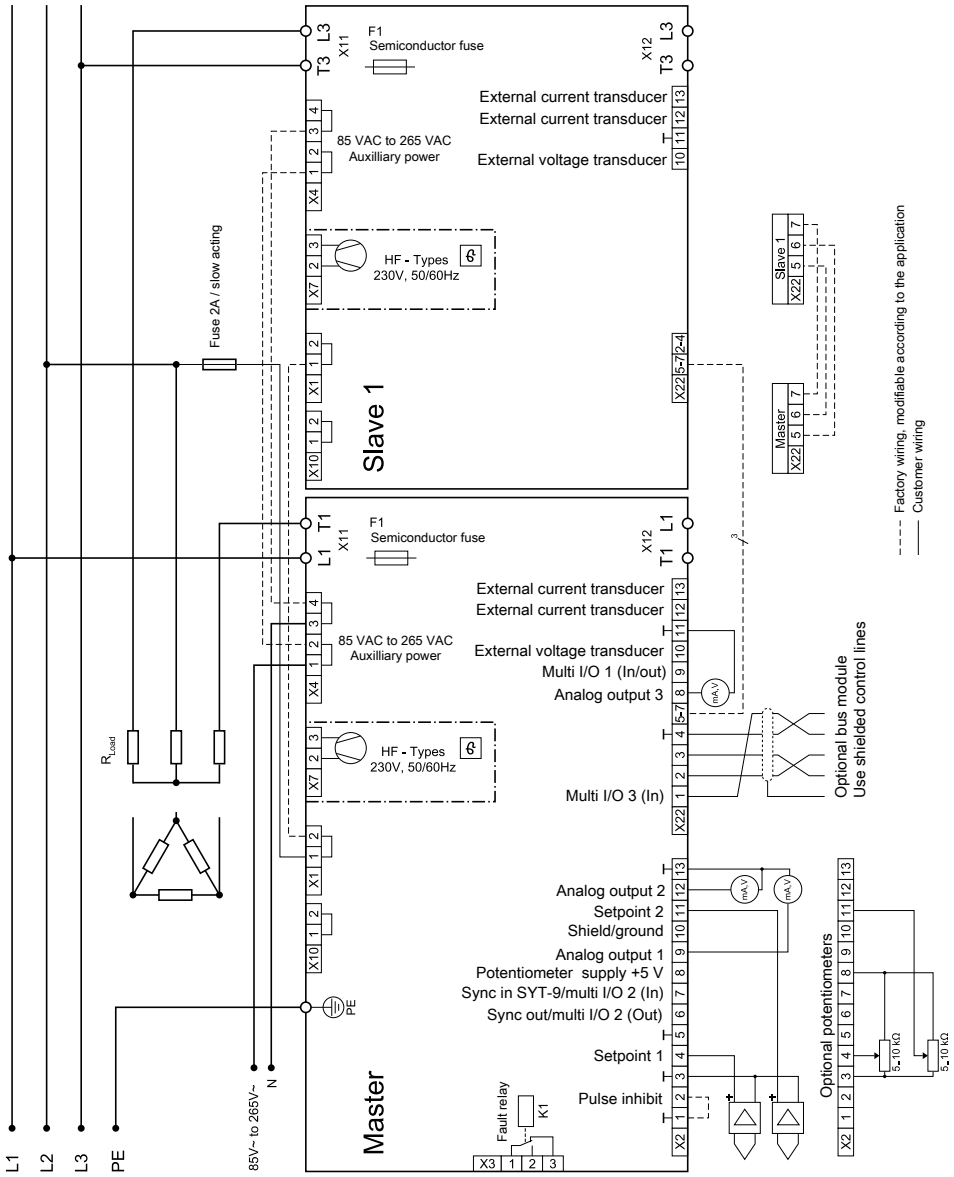


*Figure 5-30. 2A power controller connections*

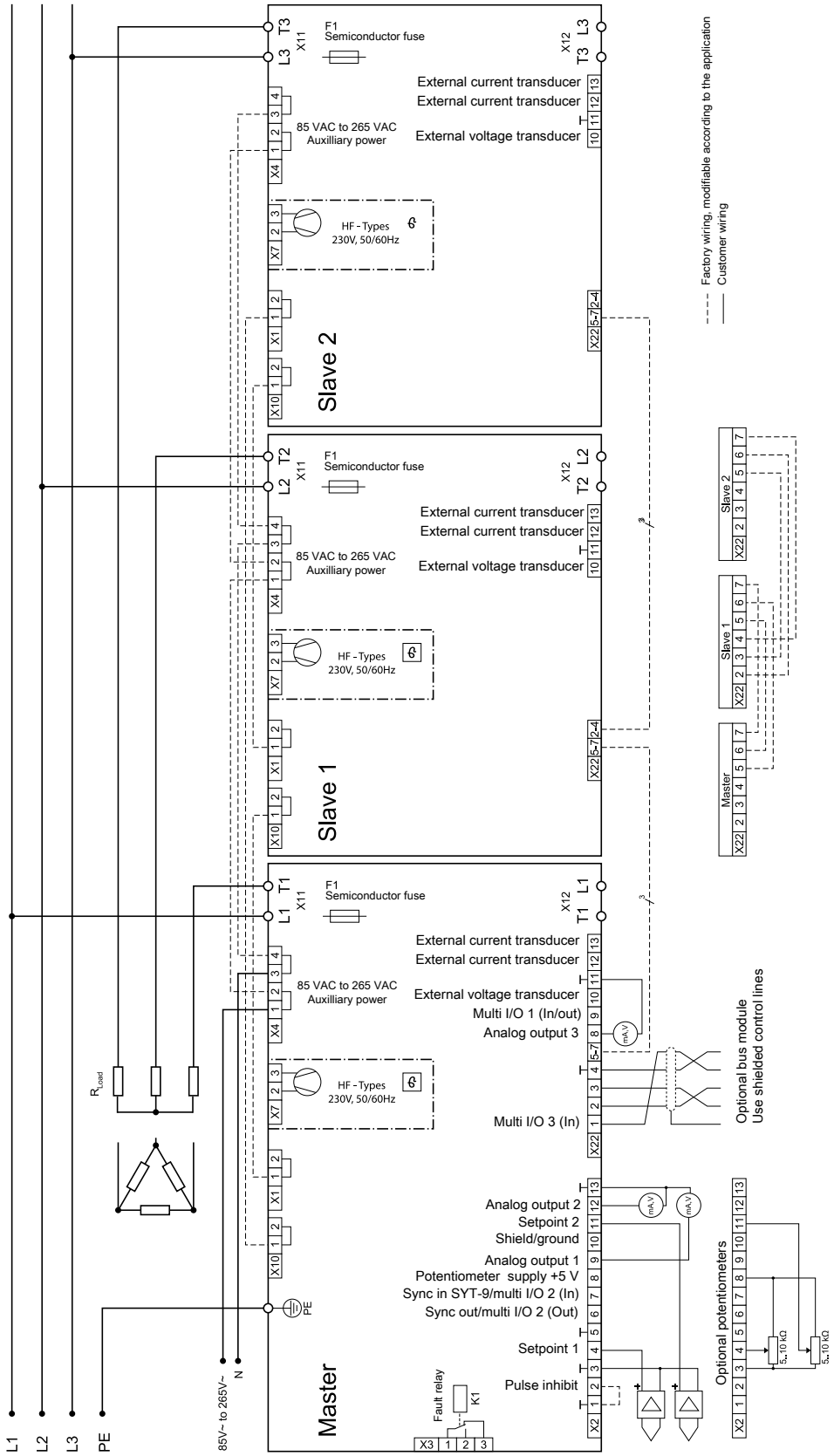


*Figure 5-31. 3A power controller connections with load in delta or star without N*

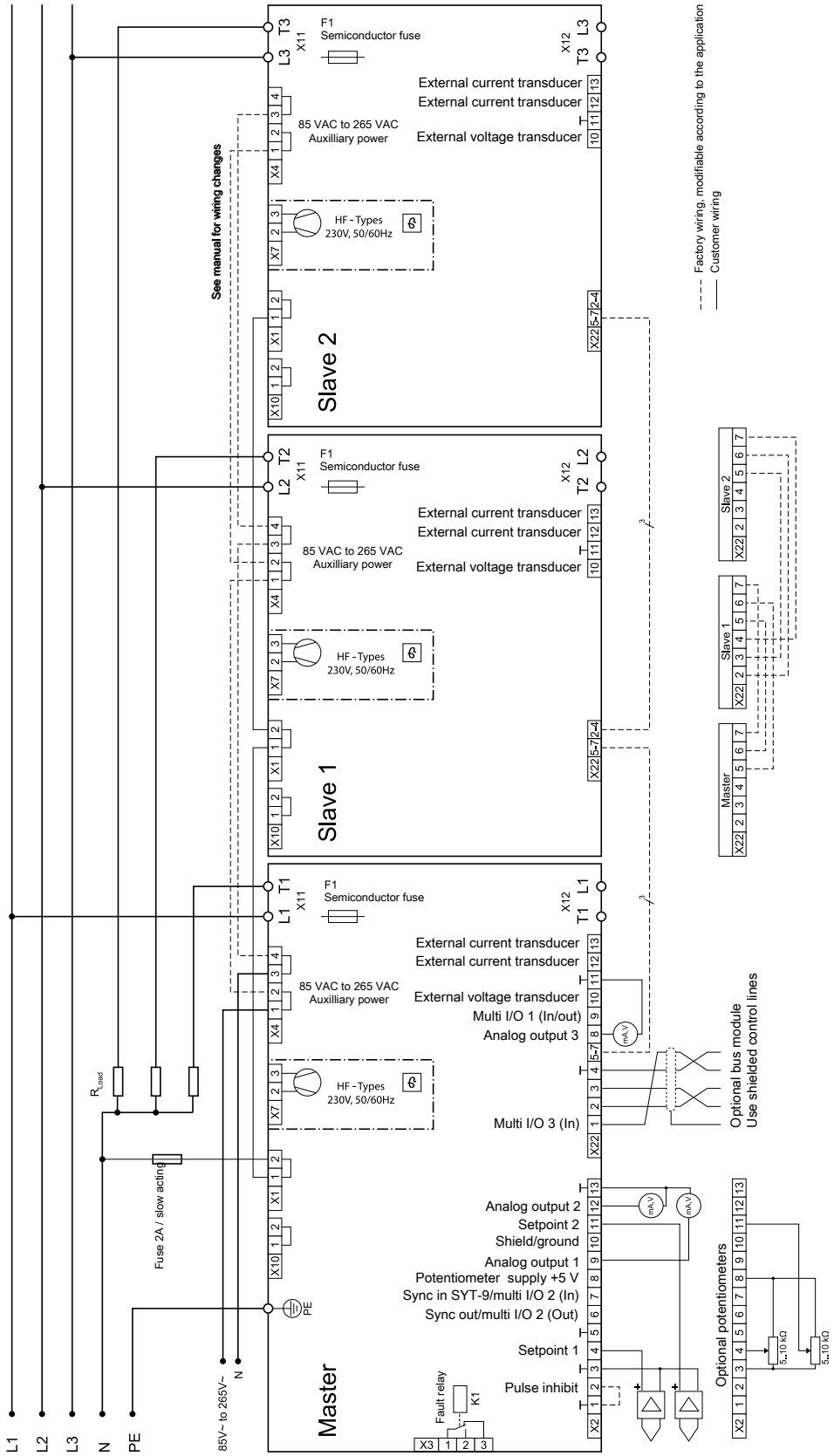


*Figure 5-32. 3A power controller connections with load in star with N*

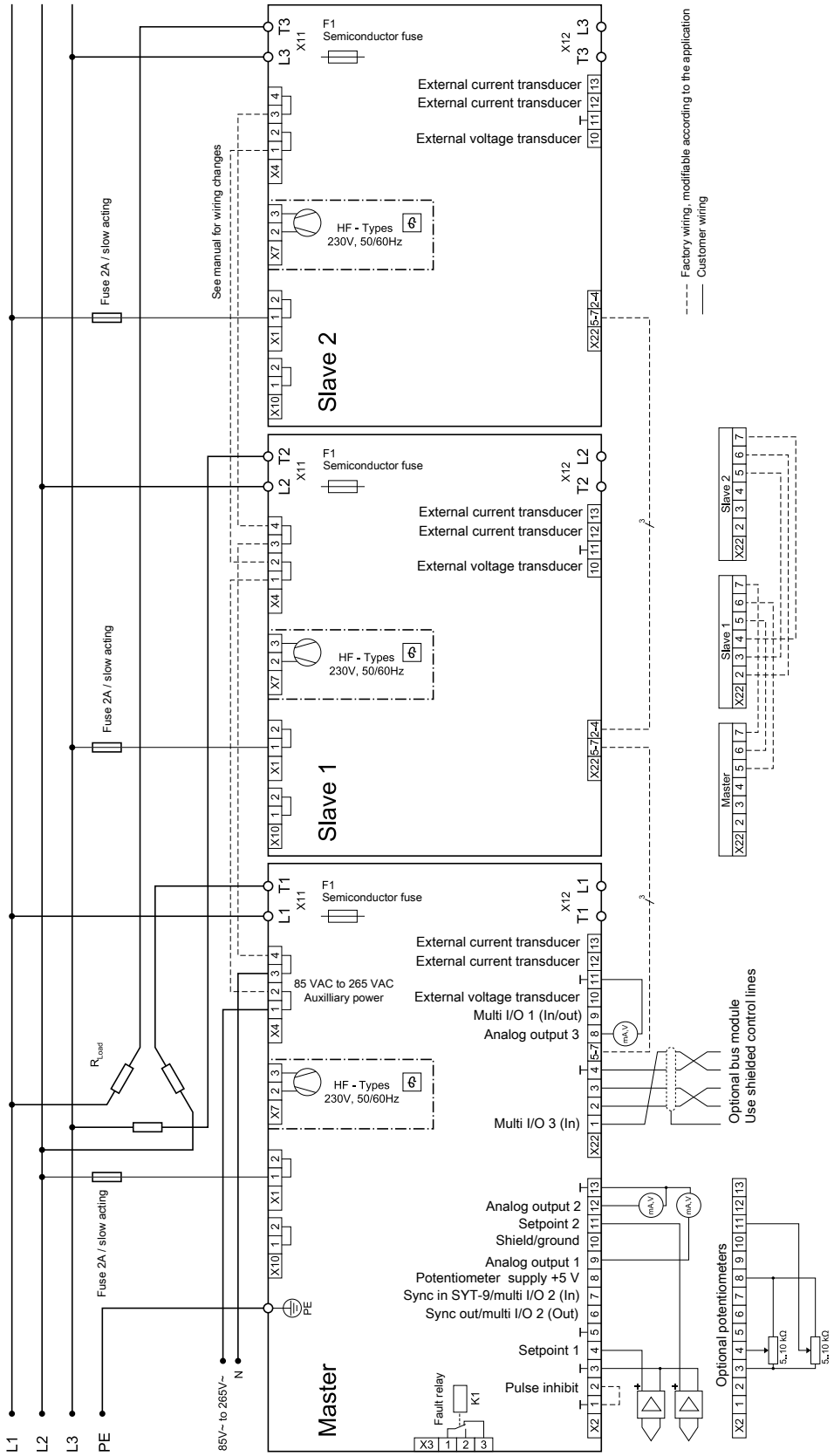


*Figure 5-33. 3A power controller connections with load in open delta*

# FIRST TIME OPERATION

On delivery, the device is parameterized to the respective power section. The TAKT operating mode is set on 1-phase and 2-phase units, and the VAR operating mode is set on 3-phase units. You should review these standard parameters, and, if necessary, adjust them for your application.

## To Operate the Thyro-AX Unit for the First Time

1. Install the unit according to the installation procedures in this user manual.

   The minimum connections are power, load, *SETPOINT*, and *PULSE LOCK* jumper.

2. Turn on the system circuit breakers and apply AC input to the unit.
3. Verify that the touch-display is active and not red.

   When the unit receives AC input, it performs self-diagnostics. If the unit detects an error, the unit sets the respective fault bits and changes the touch-display color to red. See Table 4-14 on page 4-16. You will not be able to apply power to the load until you clear the fault.

4. Verify that an increase in setpoint applies power to the load.

If the Thyro-AX unit is delivering power the unit is functioning properly.

☞ **Important**
AE recommends that you update the firmware to the latest revision using the Thyro-Tool Pro software.

### Related Links


- "Touch Display" on page 4-13
- "Software User Interface" on page 4-24


# NORMAL OPERATION

Each time you turn the unit on, the unit runs a self-diagnostics procedure to ensure that it is performing correctly. Follow the procedures in this user manual for first time operation the first time you operate your unit. Consult the troubleshooting section if you have issues or problems operating your unit after you have followed the first time operation guidelines.

You can monitor your unit with a system (user-supplied) controller or a Windows-based personal computer running Thyro-Tool Pro software. To order this software, contact your AE sales representative.

# OPERATING MODES

## Full-Wave Switch (TAKT)

In full-switch mode, whole multiples of the mains periods are always switched and harmonics are minimized.

The mains are switched on/off depending on the prescribed time period.

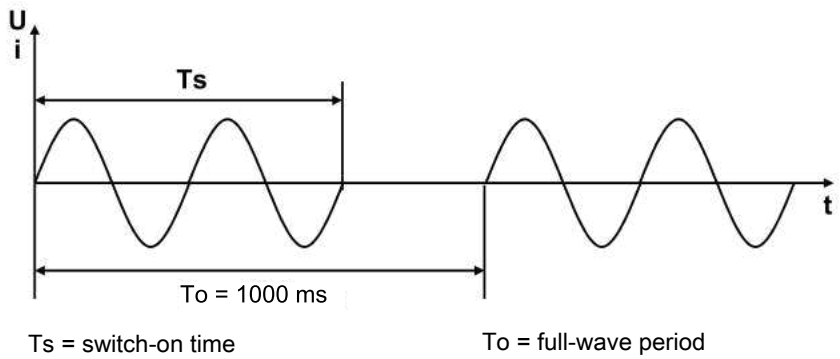


*Figure 5-34. TAKT waveform*

## Phase-Angle Firing (VAR)

Depending on the prescribed setpoint, the sine oscillation of the mains voltage is gated using a larger or smaller control angle α. This operating mode is characterized by high control dynamics.

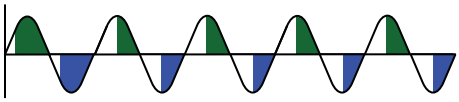

*Figure 5-35. VAR waveform*

## Half-Wave Switch QTM (Quick TAKT Mode)

QTM is an operating mode which works on the half wave switch principle, and is only available on single-phase units. QTM is suitable for resistive loads and is particularly suited for IR heaters as an alternative to phase-angle control. Whole mains half-wave periods are switched so that harmonics are minimized.

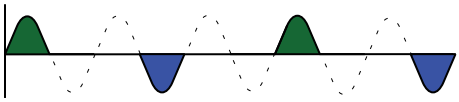

*Figure 5-36. QTM waveform*

## Switch Mode (SWITCH)

In switch mode, the mains voltage is switched on when the setpoint exceeds 50%, or the *SYNC IN* (X2.7) signal is on. This means that on-off control can be realized. Whole multiples of the mains periods are always switched and harmonics are minimized. The switch mode is suitable for resistive load and transformer load.

# SETPOINT CONTROL

## Switch Mode Setpoint

When operating in switch mode, a setpoint above 50% causes the load to be switched on; a setpoint below 50% causes the load to be switched off. A digital signal (5 V to 24 V) to terminal X2.7 (*SYNC IN*) can also be used to switch the load on and off.

## Setpoint Processing

The Thyro-AX power controller has four setpoint inputs. All setpoint inputs are electrically isolated from the mains. For the analog setpoints 1 and 2, individual control characteristics can be configured via the parameters control begin and control end.

The setpoint enable register determines whether each setpoint is added to the overall setpoint.

- Setpoint 1 analog signal, 0 mA to 20 mA default (X2.4, X2.3 ground)
- Setpoint 2 analog signal, 0 V to 5 V default (X2.11, X2.3 ground)
- Setpoint 3 digital signal, setpoint from higher-level system such as a PC with USB or via the optional bus interface
- Setpoint 4 digital signal, touch display digital potentiometer

The setpoint inputs 1 and 2 are two electrically identical analog inputs for current or voltage signals, with a resolution of 0.025% of full scale. The following signal ranges can be configured using the touch display, Thyro-Tool Pro software, and bus:

- 0(4) mA to 20 mA (Ri = ~ 250 Ω), maximum 24 mA
- 0(1) V to 5 V (Ri = ~ 8.8 kΩ), maximum 12 V
- 0(2) V to 10 V (Ri = ~ 5 kΩ,) maximum 12 V

The setpoint signal can be configured by the user to a process controller or an automation system. To do this, the start and end points of the control characteristics are altered. The display will indicate if the unit reaches a limitation (U_Max, I_Max, or P_Max).

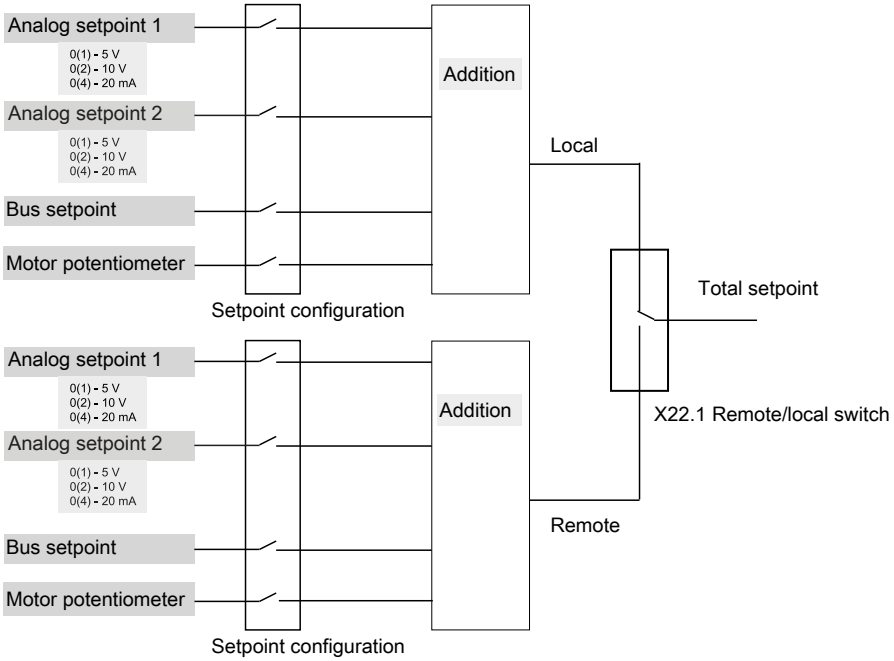


*Figure 5-37. Setpoint*

**Configure Overall Setpoints**

Two configurations for the overall setpoint are possible which each allow a configurable combination of setpoints. In this way, an alternative configuration can be selected quickly by connecting X22.1 to ground. This allows local/remote switching to be implemented.

The values of the default settings are:

- Setpoint configuration 1 (local, no ground to terminal X22.1)
  - Analog signal 1
  - Analog signal 2
  - Digital signal from digital potentiometer
- Setpoint configuration 2 (remote, ground to terminal X22.1)
  - Digital signal from USB or bus interface

# CONTROL TYPES

The Thyro-AX power controller has six control types effective as underlying controls. Mains voltage variations and load changes are directly and quickly adjusted by bypassing the slow temperature control system.

Before commissioning the power controller and selecting a control type, you should be familiar with the application and with the operating characteristics of the load.

# Controlled Value

The controlled value effect on the load is proportional to the total setpoint, depending on the control type, as shown in the following table.

*Table 5-3. Control modes*

| Control Mode | Control Value |
|---|---|
| U control | Output voltage, $U_{RMS}$ |
| $U^2$ control | Output voltage, $U^2_{RMS}$ |
| I control | Output current, $I_{RMS}$ |
| $I^2$ control | Output current, $I^2_{RMS}$ |
| P control | Output (active) power, P |
| No regulation | Output proportional to the setpoint |

# Control Characteristic Curves

The control variable influencing the load is proportional to the effective setpoint in the case of control modes U, I, and P. In control modes $U^2$ and $I^2$, the control variable influencing the load is a square of the effective setpoint.

The control characteristic curves are shown in the following three figures.

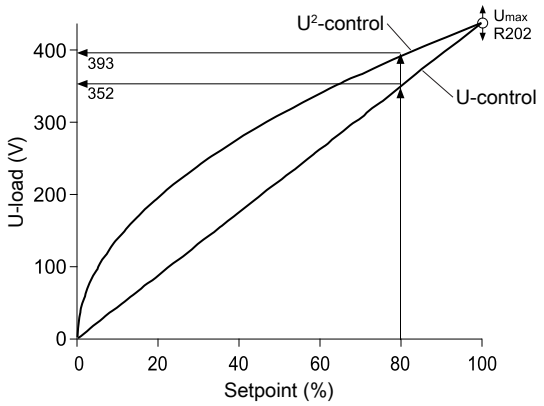


*Figure 5-38. U control*

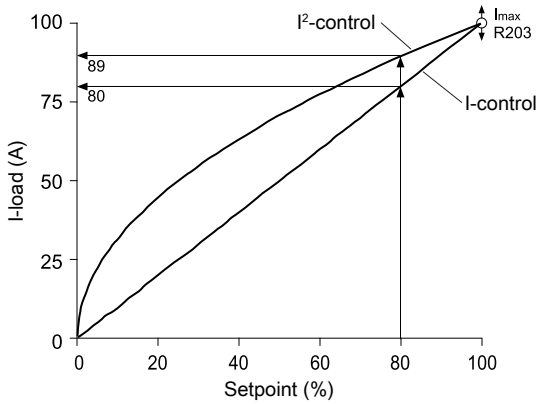


*Figure 5-39. I control*

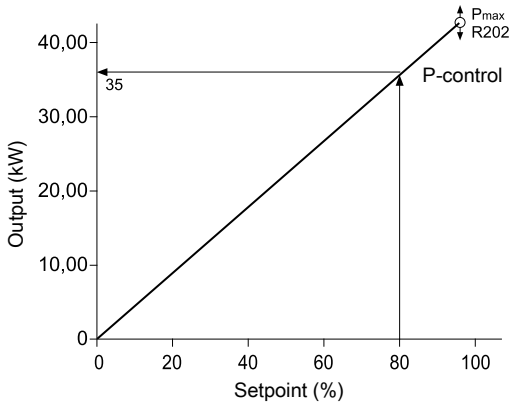


*Figure 5-40. P control*

## Controller Response

If the load resistance changes (for example, due to temperature effect, aging, or load fault), the power controller responds as shown in the following table.

*Table 5-4. Response to load changes*

| Control Type | Limit | Load Resistance Decreases | | | Load Resistance Increases | | | Effective Limitations | |
|---|---|---|---|---|---|---|---|---|---|
| | | P | $U_{LOAD}$ | $I_{LOAD}$ | P | $U_{LOAD}$ | $I_{LOAD}$ | | |
| U | $U_{RMSmax}$ | Larger | = | Larger | Smaller | = | Smaller | $I_{RMSmax}$ | $P_{max}$ |
| $U^2$ | $U_{RMSmax}$ | Larger | = | Larger | Smaller | = | Smaller | $I_{RMSmax}$ | $P_{max}$ |
| I | $I_{RMSmax}$ | Smaller | Smaller | = | Larger | Larger | = | $U_{RMSmax}$ | $P_{max}$ |

*Table 5-4. Response to load changes (Continued)*

| Control Type | Limit | Load Resistance Decreases | | | Load Resistance Increases | | | Effective Limitations | |
|---|---|---|---|---|---|---|---|---|---|
| | | P | $U_{LOAD}$ | $I_{LOAD}$ | P | $U_{LOAD}$ | $I_{LOAD}$ | | |
| $I^2$ | $I_{RMSmax}$ | Smaller | Smaller | = | Larger | Larger | = | $U_{RMSmax}$ | $P_{max}$ |
| P | $P_{max}$ | = | Smaller | Larger | = | Larger | Smaller | $U_{RMSmax}$ | $I_{RMSmax}$ |
| Without control | | Larger | = | Larger | Smaller | = | Smaller | $U_{RMSmax}$ $P_{max}$ | $I_{RMSmax}$ |
| General modulation limit | | | | | | | | $T_s=T_{smax}$ $\alpha=\alpha_{max}$ | |

# MONITORING

Faults occurring in the power controller or in the load circuit are signaled. Signaling is performed via the touch display, and via the fault relay K1.The fault log can be read via the touch display, or via the Thyro-Tool Pro software interface after selecting the status line. Simultaneously with the fault signal, you can use the **Pulse Lock On/Off** (with acknowledgement), **Pulse Lock On/Off** (without acknowledgement), or **Regulator Lock On/Off** (without acknowledgement) configuration to require that pulse shutdown occurs. The number and content of occurred warnings or errors are shown in the status line of the touch display. Select a status line to retrieve the corresponding warning or error message.

## Fuse Monitoring

Open semiconductor fuses are detected and indicated.

## Mains Voltage Monitoring

The power controller is equipped with mains voltage monitoring. You can set the limits for U mains minimum and U mains maximum. A status message will be generated when either limit is reached.

## Device Temperature and Fan Monitoring

The function explained here is described in the default state. This setting can be changed with a bus module or with Thyro-Tool Pro software.

The Thyro-AX has temperature monitoring. If the temperature exceeds 90°C (194°F), a message is sent via the touch display, via the bus module, or via fault relay K1. The *PULSE LOCK* is actuated but can be deactivated. Note that if you deactivate the *PULSE LOCK*, you run the risk of overheating and/or damaging the unit.

For units with fans, the device temperature monitoring indirectly monitors the fan.

In case of a temperature overrange, the device will be switched off and the touch display will turn red.

☞ **Important**
When using the device under UL conditions, this feature must be switched on.

# Load Monitoring

Load monitoring can identify a breakdown of one or more resistors connected in parallel at the time of an error. Load resistance characteristic values can be either automatically determined or manually set using one of the following approaches:

- Automatically determined using the TeachIn automatic load characterization feature
- Manual entry using the Thyro-Tool Pro software
- Manual entry using the touch display

## AUTOMATIC MEASUREMENT OF NONLINEAR LOAD CHARACTERISTIC WITH TEACHIN FEATURE

Use the TeachIn feature to automatically measure the nonlinear load characteristic. You can access this feature from the main menu.

☞ **Important**
When the TeachIn feature is active, the unit will operate for approximately 20 seconds with power on to the connected load within the set limits for current, voltage, and power (I_Max, U_Max, and P_Max).

The upper and lower tolerance limit of load characteristic (R_Min and R_Max) are determined and saved for each of 10 zones. The parameter RAutoTol (default setting = 10%) determines the tolerance requirement for the TeachIn feature. You can change the tolerance parameter with the Thyro-Tool Pro software.

The load monitoring feature is activated after completion of the TeachIn load characterization.

## MANUAL ENTRY OR CHANGE OF NONLINEAR LOAD CHARACTERISTIC WITH THYRO-TOOL PRO SOFTWARE

Use the **LOAD CHARACTERISTIC** menu of the Thyro-Tool Pro software to set or change the 10 values for the upper and lower tolerance limits (R_Max and R_Min) of the load. The load monitoring can be activated or deactivated separately for the upper and lower tolerance limits (R_Max, R_Min) in the **MONITORING** menu.

## MANUAL ENTRY OF LINEAR LOAD RESISTOR VALUE VIA THE TOUCH DISPLAY

Press **SETTINGS → MONITORING** on the touch display to manually enter the linear load resistor value (R_Max).

With load monitoring active, R_Max shows the arithmetic mean of the 10 load resistor characteristic values. With load monitoring deactivated, the value for R_Max is 0. If R_Max is set (by pressing **OK**) to a value > 0 on the touch display, the applicable existing nonlinear load resistor characteristic will be replaced by the defined linear resistor of R_Max, and load monitoring will be activated. If R_Max is set to 0 on the display, the load monitoring will be deactivated.

Use the TeachIn function to automatically adjust the R_Max parameter. TeachIn determines the value for R_Max by measuring the current and voltage, plus a variable addition (parameter RAutoTol, default value = 10%). Use the Thyro-Tool Pro software to change the RAutoTol parameter. While TeachIn determines the value for R_Max, the I_Max, U_Max, and P_Max limits are still in use.

☞ **Important**

- The Thyro-Tool Pro software can reactivate the load monitoring together with the (nonlinear) load characteristic of the device.
- The adjusted monitoring value of R_Max should be halfway between the resistance value without error and the resistance value with an error. However, R_Max should not fall below 15%.

The following tables show the minimal load nominal current (I-load-nominal/I-type controller) and minimal load nominal voltage (U-load-nominal/U-type controller). The tables describe the worst case performance. Typically, higher accuracy can be achieved, so that a larger number of parallel loads can be monitored.

*Table 5-5. Thyro-AX 1A, 2A, and 3A, load with separate star point without neutral conductor*

| Number of Parallel Load Resistors | $I_{LOAD\ NOMINAL}$ / $I_{TYPE\ CONTROLLER}$ [1] | $U_{LOAD\ NOMINAL}$ / $U_{TYPE\ CONTROLLER}$ [1] | Resistance Change in Fault [2] | Recommended Settings For R_Max |
|---|---|---|---|---|
| 1 | 20% | 40% | Unlimited | $R_{Load}$+50% |
| 2 | 20% | 40% | + 100% | $R_{Load}$+50% |
| 3 | 40% | 40% | + 50% | $R_{Load}$+25% |
| 4 | 40% | 40% | + 33% | $R_{Load}$+18% |
| 5 | 40% | 40% | + 25% | $R_{Load}$+15% |

[1] Minimum value for 100% setpoint

[2] Partial load fault

*Table 5-6. Thyro-AX 2A and 3A load with common star point without neutral conductor*

| Number of Parallel Load Resistors | $I_{LOAD\ NOMINAL}$ / $I_{TYPE\ CONTROLLER}$ *[1]* | $U_{LOAD\ NOMINAL}$ / $U_{TYPE\ CONTROLLER}$[1] | Resistance Change in Fault *[2]* | Recommended Settings For R_Max |
|---|---|---|---|---|
| 1 | 20% | 40% | Unlimited | $R_{Load}$+50% |
| 2 | 20% | 40% | + 67% | $R_{Load}$+33% |
| 3 | 40% | 40% | + 33% | $R_{Load}$+18% |
| 4 | 40% | 40% | + 22% | $R_{Load}$+15% |

[1] Minimum value for 100% setpoint
[2] Partial load fault

*Table 5-7. Thyro-AX 2A and 3A load in delta connection*

| Number of Parallel Load Resistors | $I_{LOAD\ NOMINAL}$ / $I_{TYPE\ CONTROLLER}$ *[1]* | $U_{LOAD\ NOMINAL}$ / $U_{TYPE\ CONTROLLER}$[1] | Resistance Change in Fault *[2]* | Recommended Settings For R_Max |
|---|---|---|---|---|
| 1 | 20% | 40% | +73% | $R_{Load}$+36% |
| 2 | 20% | 40% | +31% | $R_{Load}$+16% |
| 3 | 60% | 40% | +20% | $R_{Load}$+15% |

[1] Minimum value for 100% setpoint
[2] Partial load fault

*Table 5-8. Thyro-AX 3A load with common star point with neutral conductor / open delta connection*

| Number of Parallel Load Resistors | $I_{LOAD\ NOMINAL}$ / $I_{TYPE\ CONTROLLER}$ *[1]* | $U_{LOAD\ NOMINAL}$ / $U_{TYPE\ CONTROLLER}$[1] | Resistance Change in Fault *[2]* | Recommended Settings For R_Max |
|---|---|---|---|---|
| 1 | 20% | 40% | Unlimited | $R_{Load}$+50% |
| 2 | 20% | 40% | + 100% | $R_{Load}$+50% |
| 3 | 40% | 40% | + 50% | $R_{Load}$+25% |
| 4 | 40% | 40% | + 33% | $R_{Load}$+18% |
| 5 | 40% | 40% | + 25% | $R_{Load}$+15% |

[1] Minimum value for 100% setpoint
[2] Partial load fault

☞ **Important**

- In operating mode VAR, the monitoring is blocked for large control angles (for load with neutral conductor alpha > 140°, for load without neutral conductor alpha > 117°).
- In operating mode TAKT, the monitoring is blocked for low setting times (Ts) (by 2-phase devices Ts < 2 periods).

# MAINS LOAD OPTIMIZATION

Mains load optimization offers considerable benefits by reducing mains load peaks and system disturbances. Mains load optimization is possible under the following conditions:

- When more than one power controller is used
- Operating mode TAKT

The mains load is optimized by cascading the switching on of the individual devices. There are four different processes for mains load optimization, described in the following sections.

## Internal Mains Load Optimization

In the operating modes QTM and TAKT, the synchronization of 2-12 controllers is possible. The operating mode QTM works in a quick half wave switch principle with a pattern of switched and blocked half waves at a set time interval < 1 second, also known as T0. In order to create a balance in the mains, from the start the individual controllers synchronize by offsetting themselves by a network period. The first of the controllers connected has the SYT input X2.7 bridged to +5 V X2.8.

The controllers which follow the first controller get their signal to X2.7 from the synchronization output (X2.6) of the previous controller. At the last controller X2.6 is not connected.

## Synchronization With Optional Thyro--Power Manager Accessory

If power controllers are operating in the full wave switch mode (TAKT), then this can lead to an increased mains load through an unfavorable spread of switching on and off times. This has negative effects such as higher power loss and flicker effects. If load elements whose resistances increase over time (ageing) are used, then potentially a transformer with increased power output might need to be implemented.

All of these negative effects can be avoided or reduced to a minimum level by using the Thyro--Power Manager. The Thyro--Power Manager has a total of 10 digital outputs at terminals **X3** and **X4**. These digital outputs are set up as potential free optical coupler outputs. When optimizing the network load, the digital outputs are

used as synchronization outputs (SYT) for the connected power controllers or power controller groups. All cables are to be laid shielded with the shield grounded at the output switch. For more information, see the Thyro--Power Manager operating instructions, available separately.

Characteristics:

- Minimal mains peak load and related mains feedback rates
- Changes to the setpoint and load do not automatically feed into the mains load optimization
- Can also be used in connection with already existing Advanced Energy power controllers

## Synchronization With Optional Thyro- dASM Module or dASM Bus Module

The dASM (Digital Automatic Synchronization for Multiple Power Controller Applications) module and dASM bus module can also be used for mains load optimization. By transmitting and processing mains load data digitally, dASM technology offers the maximum processing speed possible, quickly achieving an optimized network load.

For more information see the Thyro--dASM module or dASM bus module operating instructions, available separately.

## Software Synchronization with Solid Delay

Software synchronization is a method of mains load optimization that can be configured via either an optional bus module or the Thyro-Tool Pro software. The software synchronization is configured by inputting a parameter and causes a delay of the initial ignition when the unit is switched on.

- The cycle period T0 must be the same for all power controllers. AE recommends that T0 = 50 periods (where 50 Hz = 1 second).
- When configuring with the Thyro-Tool Pro software, set the delay in menu **Load optimization → SYNC offset time**. Select a different value for each power controller.

All devices used must be simultaneously switched on at the load supply, using a corresponding switch or contactor. A delay time in milliseconds is set to determine when each unit begins to supply power to the load. As a result, the time until the first switching on is different for each power controller.

This procedure allows the load to be connected slowly, with a slow cycle time of 1 second.

The following figure shows the reduced load from four controllers with their SYNC offset times set to 0 (1000), 250, 500, and 750.

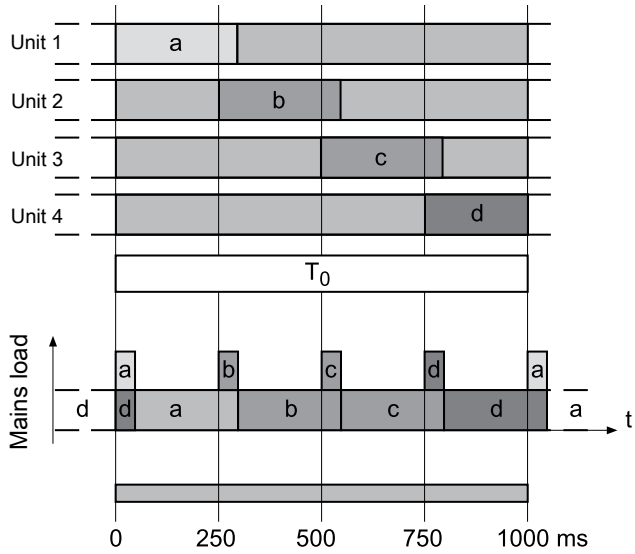


*Figure 5-41. Software synchronization*

# Basic Bus Module

The Basic Bus module is an optional accessory for the Thyro-A...3, Thyro-Aeco, Thryo-S...3, and Thryo-PX...3 series power controller. It can control up to eight power controllers, and uses the Thyro Anybus® module to connect to your network. The module allows the power controller to be integrated into complex installations via the field network.

With the optional digital Automatic Synchronization for Multiple power controllers feature (dASM), up to 4 Basic Bus modules can be interconnected to optimize the mains load for very large installations.

*Figure 5-42. Basic Bus Module*

# MAINTENANCE

## Fan Maintenance

The fan is subject to wear. Complete the following visual inspection every year:

- Inspect the fan blade for abrasion, deposition, and corrosion.
- Check the fan for abnormal operating noise.

The fan has an expected lifetime of L10 = 37,500 h. Depending on working conditions, a new fan should be installed after approximately five years.

# Troubleshooting and Global Services

Before calling AE Global Services, perform recommended checks and troubleshooting procedures. If you are still unable to resolve the issue and resume normal operation after following these checks and procedures, contact AE Global Services.

## TROUBLESHOOTING CHECKLIST

**DANGER:**

RISK OF DEATH OR BODILY INJURY. Disconnect and lockout/tagout all sources of input power before working on this unit or anything connected to it.

**DANGER:**

RISQUE DE MORT OU DE BLESSURES. Débrancher et verrouiller/étiqueter toutes les sources de puissance d'entrée avant de travailler sur cet appareil ou sur tout élément qui y est raccordé.

**DANGER:**

Personnel must receive proper training before installing or troubleshooting high-energy electrical equipment. Potentially lethal voltages could cause death, serious personal injury, or damage to the equipment. Ensure that all appropriate safety precautions are taken.

**DANGER:**

Le personnel devra être correctement formé avant de pouvoir installer ou dépanner des équipements électriques à haute énergie. Des tensions potentiellement létales peuvent entraîner le décès, des blessures ou des dommages à l'équipement. Assurez-vous de prendre toutes les précautions de sécurité appropriées.

*Table 6-1. Using the touch display for troubleshooting*

| Troubleshooting Check | Action |
|---|---|
| Is the touch display lit? | If no: There might be an external line fault.<br>1. Make sure that there are no loose wires or unreliable connections in the AC input line.<br>2. Make sure that the AC disconnect switch is closed.<br>3. Make sure that all three phases on the AC voltage line are present and meet specifications.<br>4. If the display remains unlit, call AE Global Services. |
| Is the red fault message on the touch display? | If yes: The unit has detected a fault. This fault will generate error data that can be viewed using the touch display or the Thyro-Tool Pro software. See Table 4-14 on page 4-16. |
| Is the red limit message on the touch display? | If yes: The unit is unable to supply enough power to match the setpoint due to a limiting condition. When an internal protection limit is exceeded, the output is limited, but not shut off. The limit message can be viewed using the touch display or the Thyro-Tool Pro software. See Table 4-15 on page 4-17.<br>1. Disable the output.<br>2. Inspect and evaluate the unit load connections. Look for signs of heat stress. |
| Turn off AC power and make these checks. | • Check for visible damage to the unit, cables, and connectors.<br>• Ensure that all unit connectors are installed correctly and are fastened tightly.<br>• Verify that no system-related circuit breakers have been tripped.<br>• Ensure that ground connections are adequate and secure. |
| Turn AC power on. Is a red limit message shown on the touch display when you turn the unit on? | If yes: Continue troubleshooting the power limit to determine whether the unit is faulty or whether the system is creating a situation in which the unit cannot provide the necessary output. If you cannot return the unit to normal operation after power limit troubleshooting, call AE Global Services. |

# TROUBLESHOOTING UNIT OUTPUT

Use extreme caution when troubleshooting the unit output.

**DANGER:**

RISK OF DEATH OR BODILY INJURY. Disconnect and lockout/tagout all sources of input power before working on this unit or anything connected to it.

**DANGER:**

RISQUE DE MORT OU DE BLESSURES. Débrancher et verrouiller/étiqueter toutes les sources de puissance d'entrée avant de travailler sur cet appareil ou sur tout élément qui y est raccordé.

**DANGER:**

Personnel must receive proper training before installing or troubleshooting high-energy electrical equipment. Potentially lethal voltages could cause death, serious personal injury, or damage to the equipment. Ensure that all appropriate safety precautions are taken.

**DANGER:**

Le personnel devra être correctement formé avant de pouvoir installer ou dépanner des équipements électriques à haute énergie. Des tensions potentiellement létales peuvent entraîner le décès, des blessures ou des dommages à l'équipement. Assurez-vous de prendre toutes les précautions de sécurité appropriées.

## Display Not Lit

If the touch display is not lit, check for these errors:

- The customer-supplied auxiliary power supply is missing.
- Check that the voltage at terminal X4.1 and X4.3 is within the range 85 VAC to 265 VAC.
- Check that the semiconductor load fuses are not open.
- For transformer loads, the phase angle of the first half-wave might need to be optimized. Begin with a phase angle (phase angle 1) = 60 degrees, and slowly increase until the inrush current is minimized.

## No Load Current

Check the following if no load current is present:

- Pulse lock X2.1 is jumpered to X2.2.
- Setpoint is available and active. Using the display or software, check the total setpoint (effective total), or measure setpoint on X2.9 and X2.10.

  - Setpoints are not cleared.
  - Parameterization of the setpoint inputs 20 mA, 5 V, 10 V, is matched to output of the temperature controller.
  - Parameters of the control characteristic of the respective analog input are correct.
- Parameters Iemax, Uemax, and Pmax are set too small.
- Controller parameters Ti or Kp are set too large.
- The load is broken or disconnected (only for type 1A).
- For 1A and 2A units, verify that the reference phase is connected.

## Thyristors Are Set To Full Scale

Check the following if the thyristors are set to full scale load current without a setpoint:

- Make sure that the motorpotentiometer setpoint is set to 0.
- Check the control characteristic of the respective analog inputs.
- Verify that parameters Ts, Uemin, Iemin, and Pmin are 0.
- Controller parameters Ti and Kp are set too small.
- Parameters Iemax, Uemax, and Pmax are set too large or the load current is too small.
- If no load is connected the voltage will be higher than 0 V. A load must be connected to troubleshoot this condition.
- Check the thyristor resistance between L1 and T1, L2 and T2, L3 and T3. If the resistance is greater than 100 Ω, the thyristor is not damaged.

## Other Malfunctions

Check the following for other malfunctions:

- Evaluate the fault log entries with the touch display or the Thyro-Tool Pro software.
- Check the parameters.
- Check the wiring of the unit.
- Check the number of controlled phases (parameters).
- Eliminate the fault indicated by the fault relay.
- Visually verify correct operation by replacing the loads with appropriately rated incandescent lamps.

# AE GLOBAL SERVICES

Please contact AE Global Services if you have questions or problems, or if you need customer support. Before contacting AE Global Services, please work through the provided troubleshooting. When you contact Global Services, please include the unit serial number and part number. These numbers are available on unit labels.

☞ **Important**
For returns and repairs, please contact AE Global Services to get the correct shipping address.

## Primary Contact Information

Visit the Advanced Energy website for current service and support contact information:

http://www.advancedenergy.com

## Alternate Contact Information

If you do not have access to the Advanced Energy website, then use one of the following:

- Phone (24 hrs/day, 7 days/week):
  800.446.9167
  or
  +1.970.221.0108
- Email: (We will respond to email by the next business day.)

  mailto:technical.support@aei.com

For Power Control Module product support, contact by phone or email:

+49 (0) 2902 910370 10 (technical support during German business hours)

mailto:powercontroller@aei.com

# RETURNING UNITS FOR REPAIR

Before returning any product for repair and/or adjustment, first follow all troubleshooting procedures. After following troubleshooting procedures, if your unit is unable to resume normal operation, contact AE Global Services and discuss the problem with a representative. Be prepared to provide the model number and serial number of the unit, as well as the reason for the proposed return. This consultation call will allow AE Global Services to determine if the unit must actually be returned

for the problem to be corrected. Such technical consultation is always available at no charge.

# Index


## A

AE customer service contact information 6-5
authorized returns 6-5

## B

basic bus module 5-47

## C

certification 1-5
communication 4-7
compliance
    directives and standards 1-5
    environmental 1-6
    unit 1-4
conditions of use 1-5
conformity, letter and declaration 1-5
connections
    diagrams 5-29
connectors
    I/O and auxiliary 5-22
control types
    operation 5-38
cooling specifications 3-7
customer service contact information 6-5

## D

diagrams
    connection 5-29
dimensional drawings 5-1
directives and standards 1-5
display 4-13

## E

EasyStart 4-13
electrical specifications 3-4
electromagnetic compatibility
    directives and standards 1-5
environmental specifications 3-8

## F

fan maintenance 5-48
fault table 4-13
features 2-1

## G

general description 2-1
Global Services contact information 6-5
grounding 5-22
guidelines
    safety 1-2
    SEMI 1-5

## I

icons
    in user manual 1-1
    on unit 1-2
industry guidelines, compliance with 1-5
installation
    connecting I/O 5-22
    connecting the load 5-23
    grounding 5-22
    IP20 protection 5-26
    lifting 5-21
    load configuration 5-25
    mounting 5-22
    preparing to install 5-1
    requirements 5-20
    spacing requirements 5-1
    unpacking 5-21
interlock
    overview 1-7
IP20 protection 5-26

## L

labels on unit 1-2
lifting 5-21
limiting conditions
    operation 1-7
load
    connecting 5-23
load checks
    troubleshooting 6-2

## M

mains load optimization 5-45
maintenance
    fan 5-48
menu structure 4-13
monitoring
    operation 5-41
    parallel loads 5-42
    touch display 4-13
mounting 5-22
Multi I/O 4-7

## N

normal operation 5-35

## O

operating modes 5-36
operation
    control types 5-38
    first time 5-35
    monitoring 5-41
    normal 5-35
    operating modes 5-36
    relay indicators 4-6
    setpoint 5-37

## P

physical specifications 3-1
product
    certification 1-5
    compliance 1-4
    labels 1-2

## R

relay indicators
    operation 4-6

## S

safety
    conditions of use 1-5
    directives and standards 1-5
    guidelines 1-2
SEMI guidelines 1-5
software user interface 4-24
spacing requirements 5-1
specifications
    cooling 3-7
    electrical 3-4
    environmental 3-8
    physical 3-1
    type designation 3-9
standards, directives and standards 1-5
status indicators
    analog outputs 4-2
    relays 4-6
    touch display 4-2, 4-13
symbols
    in user manual 1-1
    on unit 1-2

## T

touch display
    EasyStart 4-13
    faults 4-13
    features 4-13
    menu structure 4-13
    monitoring 4-13
    status 4-13
troubleshooting
    checklist 6-1
    unit output 6-2

## U

UL 1-6
unit
    compliance 1-4
    dimensional drawings 5-1
    features 2-1
    general description 2-1
    grounding 5-22
    icons and symbols used 1-2
    IP20 protection 5-26
    lifting 5-21
    mounting 5-22
    preparing to install 5-1
    software user interface 4-24
    unpacking 5-21
unit output
    troubleshooting 6-2
unpacking 5-21
user manual
    alert boxes in 1-1
    symbols and icons used 1-1

## W

warranty
    authorized returns 6-5