DAEHAN SENSOR

Digital Liquid Indicate
with level controller

DLC – Series
Level Indicator with Relay Output

Product Name
DLC – 3U

INNOBIZ

ISO 9001 인증업체

1993 DAEHAN SENSOR CO., LTD.
All rights reserved

Table of Contents

1. Introduction 3

2. Specification 3

3. Dimensiosns 4

4. Wiring Connection 5

5. Display Operation 6

6. Check Point Before A/S 8

Introduction

This DLC-3U Series Level Controller gets signal from each point of the sensor installed in the tank and displays the level of the liquid in the tank as points. It is very easy to install.

According to user's purpose, you can choose Alarm relay, Control relay or Buzzer relay.

Also, you can choose a mode of supply or drainage.

When the liquid level goes up to reach the ALARM set point, the ALARM indicator turns on.

At the same time, the ALARM contact signal output activates the connected buzzer

Specification

- ▶ Power Supply ---------- AC110V / 220V ±10%, 50/60Hz
- ▶ Operating Temperature ---------- 0℃ ~ 60℃
- ▶ Dimensions ---------- 87mm (Wide) x 155mm (High) x 69mm (Deep)
- ▶ Material ---------- Polycabonate & A.B.S
- ▶ Max. Switching Current Capacitor ---------- 1250VA, 150W
- ▶ Max. Switching Volatge ---------- 250VDC, 30VDC
- ▶ Max. Switching Current ---------- 5A

Dimensions

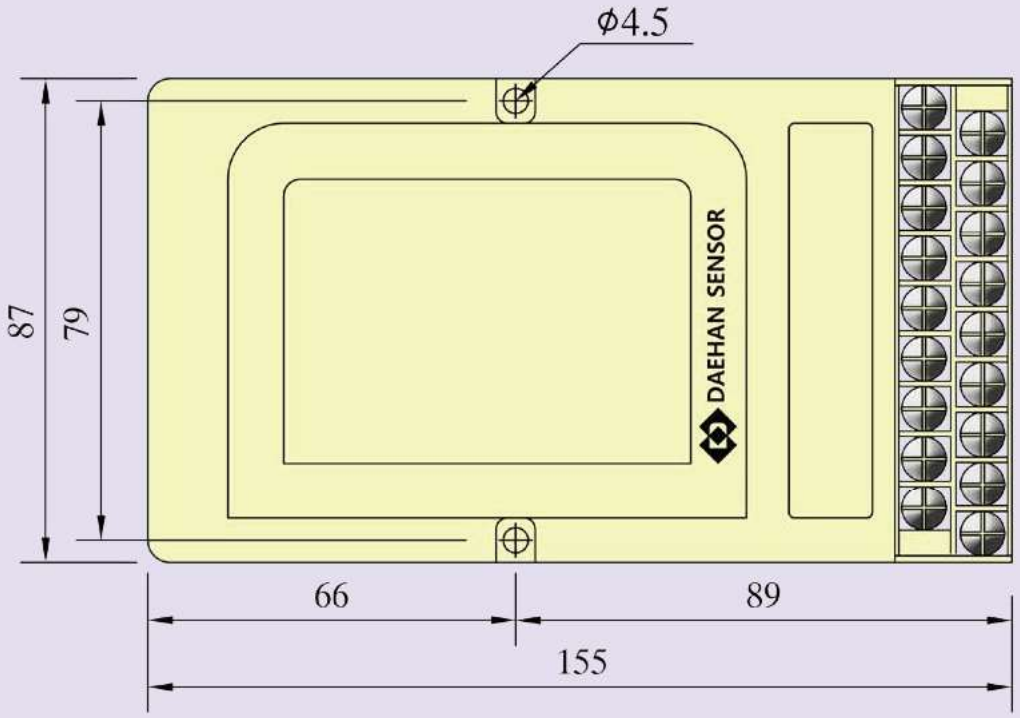

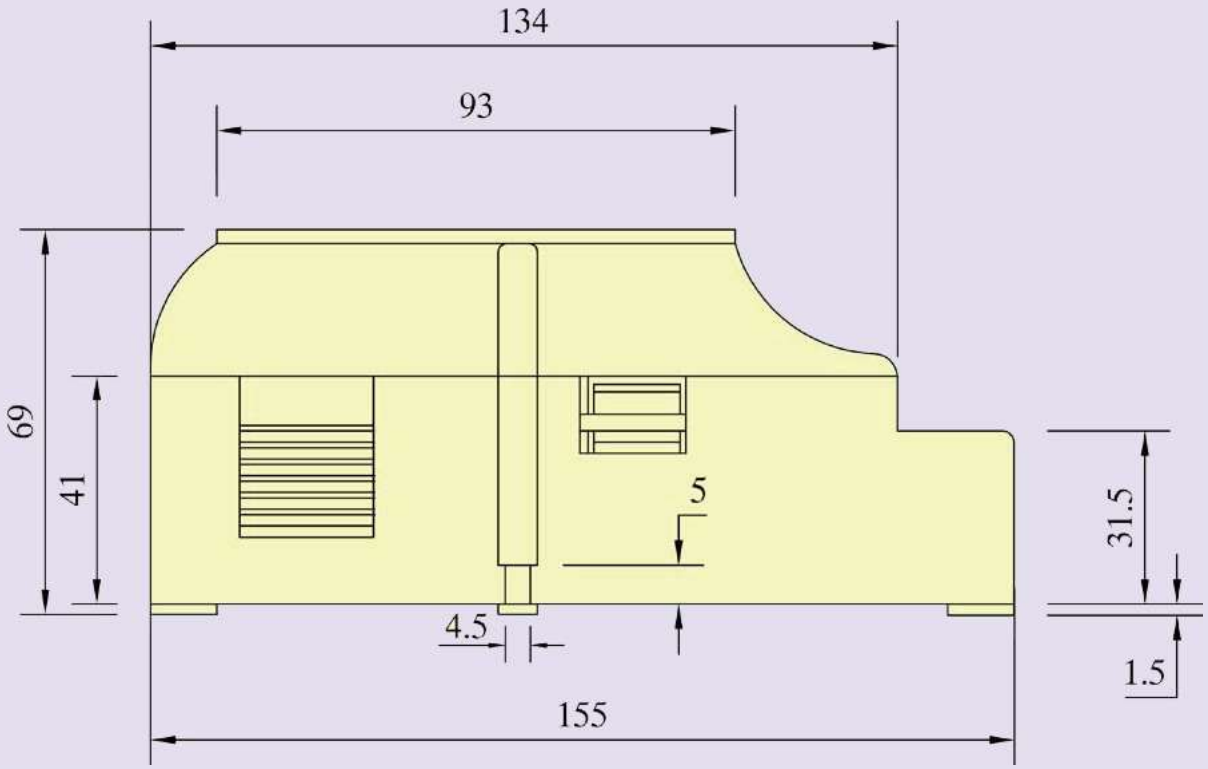

Wiring Connection

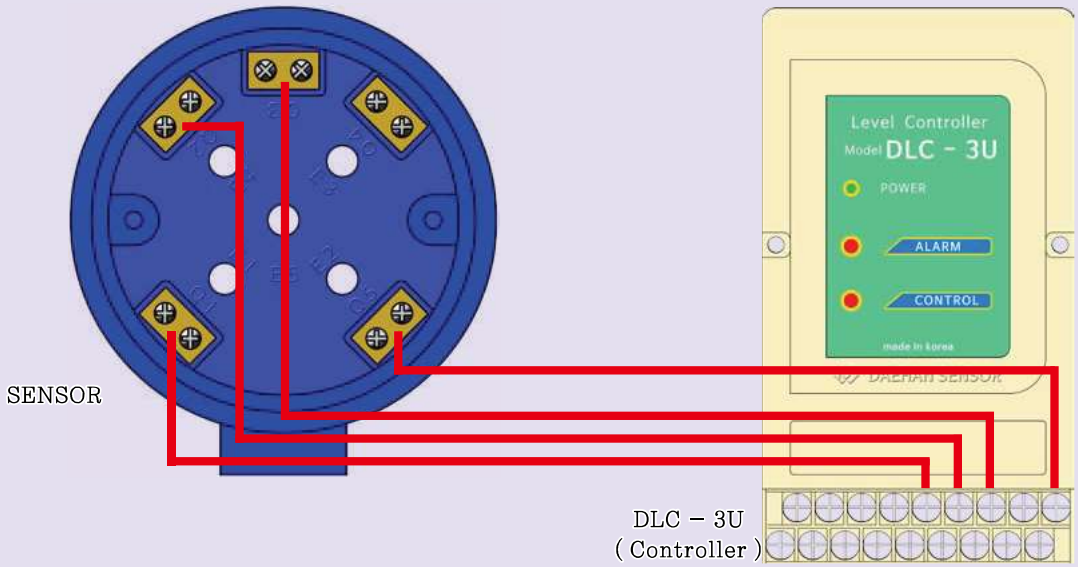

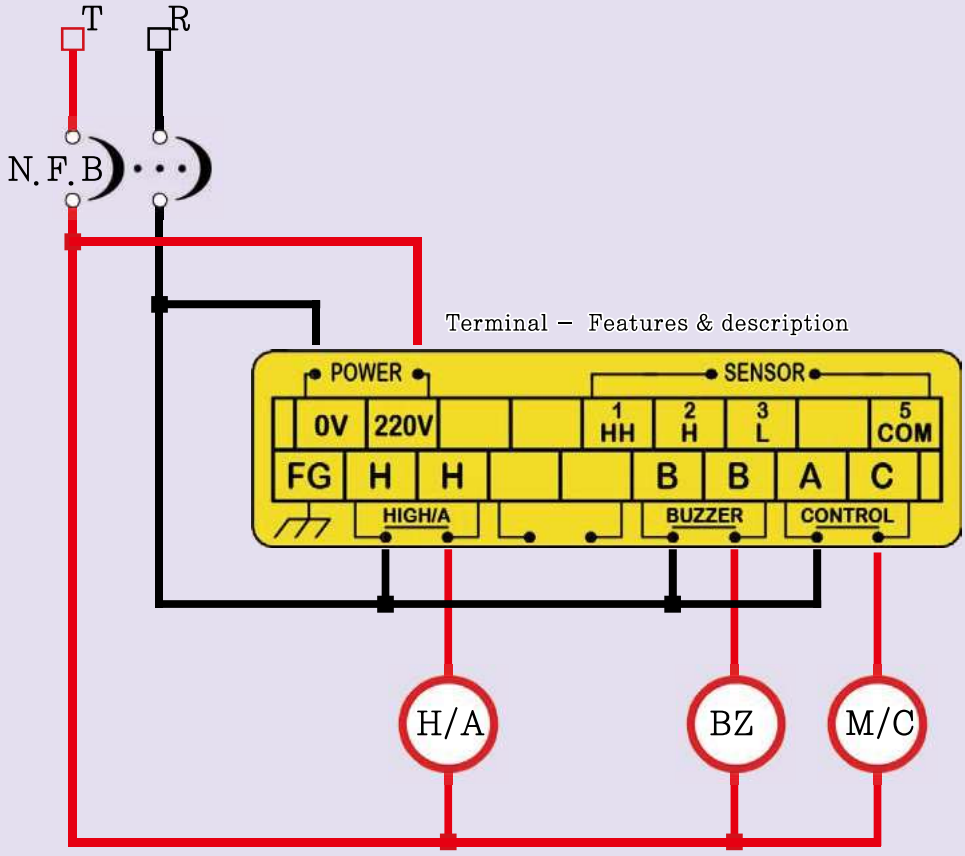

Display Operation

1. High Level Display

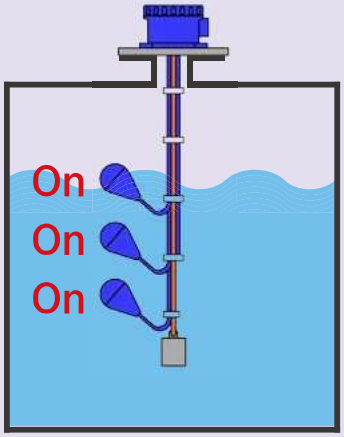

When the liquid level goes Up to reach the HIGH/A point, the HIGH/A indcator turns on. At the same time, the HIGH/A contact signal activates the connected buzzer and purmp.

Display Operation

1. Drain Control "On" Level Display

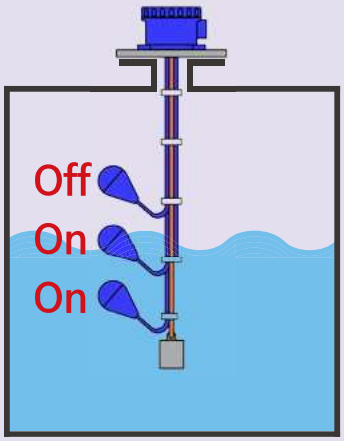

When the liquid level goes Up to reach the START point, the Control indcator turns on. At the same time, the Control contact signal activates the connected pump.

2. Drain Control "Off" Level Display

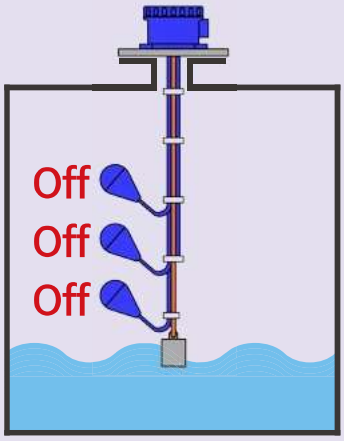

When the liquid level goes Down to reach the STOP point, the Control indcator turns off. At the same time, the CONTROL contact signal is not out and deactivates the connected pump.

Check & A/S

If you find any abnormal system during operation, please try to check below points.

1. Is the power connected to AC110V or AC220V correctly?
2. Is the wiring to the sensor made correctly?
3. Is the contact with the relay built up through correct sequence?
4. Is the current input from the sensor correct?
5. Is there any malfuction around the unit?

If the trouble still exists, please kindly contact below.

* Installation and operation manual is subject to change without prior notice for quality improvement.

Head Office
94-2, Yongdap-dong, Seongdong-gu, Seoul, Korea

R&D Office
2-71, Jeonong-dong, Dongdaemun-gu, Seoul, Korea

Tel : 02-2213-9888(代) Fax : 02-2245-3482
e.mail : master@dh34.com Domain : www.dh34.com