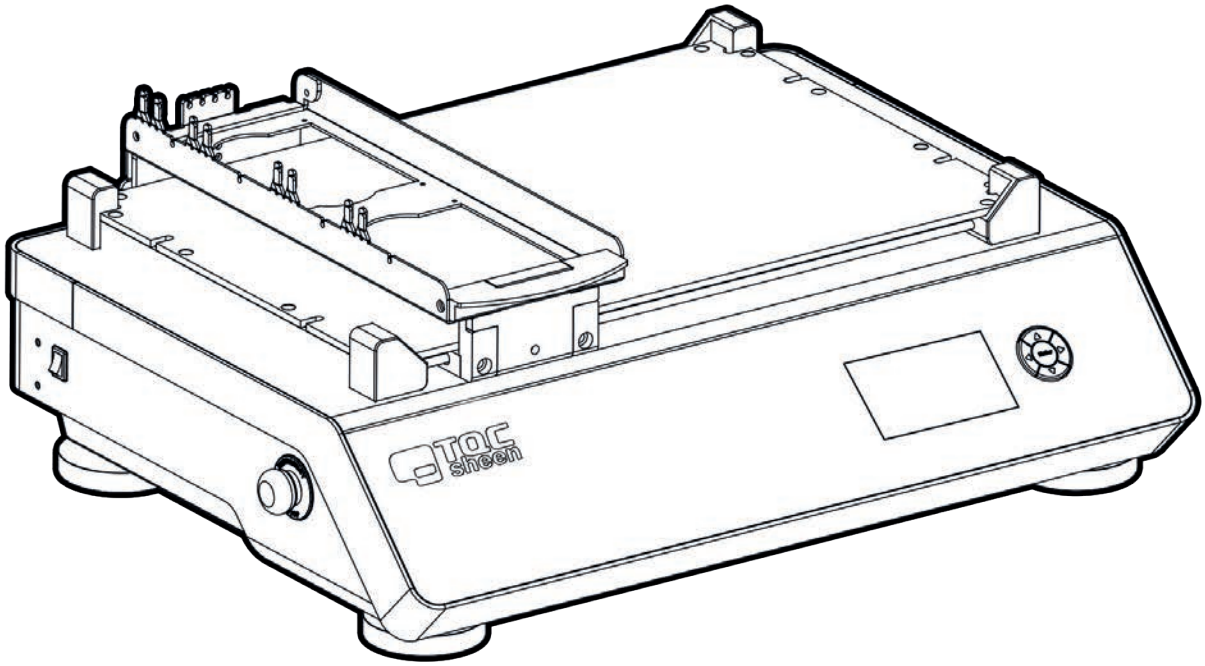

Scrub Abrasion and Washability Tester

(AB6000, AB6010)

Operating Instructions (V1.3 0718)

IMPORTANT! Before taking this instrument in use we strongly advise you to read this manual carefully.

WARRANTY

TQC Sheen will grant a warranty for a period of 12 months for the Scrub Abrasion and Washability Tester and 12 months for all related equipment from the date of delivery in respect of any evidence of faulty workmanship and materials.

Should a delivered consignment prove to be contrary to contract upon inspection, the customer shall grant TQC Sheen the opportunity hereunder of removing the fault, or else the customer may demand replacement. Because of size and weight of the instrument TQC Sheen will strive to give remote support.
Should the supply or delivery of any improvement or replacement not prove possible, the customer may choose between having the purchase price reduced or in demanding the contract of sale to be rescinded (conversion). Damage resulting from natural wear and tear, mechanical or chemical damage, an act of God or non compliance with the operating instructions shall be excluded from the warranty as well as mechanical interference by the customer or by third parties with Scrub Abrasion and Washability Tester and related equipment without TQC Sheen's written permission. No liability will be accepted for defects, damage or injury caused due to use not carried out in accordance with the manufacturer's user instructions.

To claim warranty, the rejected product has to be sent to TQC Sheen together with the original invoice, any exchange before the product has been returned to TQC Sheen is not possible. TQC Sheen reserve the right to repair, exchange or supply an equivalent substitute. TQC Sheen is not liable for handling or transport costs. Warranty on the purchase price is limited, all liability for consequential damages or changes in technology is expelled.

This product complies to
- Machinery Directive 2006/42 / EC
- Low Voltage Directive 2006/95 / EC
- EMC Directive 2004/108 / EC

This product is RoHS 2 compliant (2011/65/EU)

INDEX

1	**General**	6
1.1	Importance of operating manual	
1.2	User-responsibility	
1.3	Responsibility of personnel	
1.4	Dangers	
1.5	Designated purpose	
1.6	Copyright	
1.7	Manufacturer's/Supplier's address	
2	**Safety Instructions**	7
2.1	Meaning of Symbols	
2.2	Availability of Safety Information	
2.3	Dangers from Electrical Energy	
2.4	Modifications to the Equipment	
3	**Transport and Storage**	8
3.1	Packing	
3.2	User: Check on Receipt	
3.3	Reporting Transport Damage and Documentation	
3.4	Storage and Protective Measures when not in use	
4	**Instrument Data**	9
4.1	Name / Article	
4.2	Scope of Supply	
4.3	Technical Data	
4.4	Dimensions and Weight	
4.5	Basic Unit	
5	**Instrument Controls and Functions**	10/11
5.1	Instrument Layout	
5.2	Connecting a Mouse and Keyboard	
6	**Instrument Preperations**	12
6.1	Installation	
6.2	Tool Holders and Tools	
6.3	Fluid Tubes	
7	**Navigation**	13
7.1	Menu	
7.2	Number Input	
7.3	Text Input	
8	**Operation**	14/20
8.1	Starting the Instrument	
8.2	Run	
8.2.1	Run	
8.2.2	Manual Movement	
8.3	Run Setup	
8.3.1	Manual	
8.3.2	Alarms	
8.3.3	Pumps	
8.3.4	Custom Presets	
8.3.5	New Custom Preset	
8.3.6	Standard Presets	
8.3.7	Select Length	
8.3.8	Test Positioning	
8.3.9	Flush System (AB6000 only)	
9	**Instrument Setup**	21/22
9.1	Instrument Setup Menu	
9.2	Units	
9.3	Alarms	
9.4	Display Brightness	
9.5	System Information	
9.6	Reset	
10	**Mechanical**	23/27
10.1	Test Beds	
10.2	Sample Clamp Frames	
10.3	Tool Holders	
10.4	Tools	
10.4.1	Small Sponge (AB5012)	
10.4.2	Wild Boar Brush (AB5010)	
10.4.3	Nylon Brush (AB5011)	
10.4.4	Abrasive Pad Tool (AB5013)	
10.4.5	Universal Material Clamp (AB5020)	
10.4.6	MEK / Crockmeter Tool (AB5060)	
10.4.7	Large Sponge Tool (AB5050)	
10.4.8	TQC Sheen Cloth Holder (AB5055)	
10.4.9	Metal Shim (AB5025)	
10.4.10	Glass Bed (AB5180)	
10.4.11	Heavy Weight Support Tool (AB5032)	
10.4.12	Tubing (AB5115 and AB5113)	
11	**Care and Maintenance**	28
11.1	Disposal of Materials	
11.2	Customer Service	
12	**Disclaimer**	29
Annex A	**Standards Configuration Table**	30/31
Annex B	**Chemical Resistance**	32/43
Annex C	**Operator Qualification List**	45
Annex D	**Maintenance List**	47

1 GENERAL

1.1 Importance of operating manual

This manual is written in order to become familiar with all the functions and possible applications of the instrument. It contains important instructions about how to use the instrument safely and economically; according to the purpose designated. Following these instructions is not only essential to avoid risks. It also reduces repair costs and down-time and increases the products reliability and service-life.

Anyone who works with the instrument shall follow the instructions in this manual, particularly the safety related instructions. Additionally local rules and regulations relating to environmental safety and accident prevention should be observed. It is mandatory that users have read and understand this manual prior to first operation of the Scrub Abrasion and Washability Tester.

1.2 User-responsibility

The user should

a) Only allow persons to work with the instrument who are familiar with the general instructions on how to work safely and to prevent accidents. The use of the instrument should have been instructed duly.

b) Regularly check the safety-awareness of personnel at work.

1.3 Responsibility of personnel

Before commencing work anyone appointed to work with the instrument should pay attention to the general regulations relating to working safety and accident prevention. The safety chapter and the warnings in this manual should have been read and understood; acknowledged as evidenced by their signature as can be placed in the Operator Qualification list Annex C.

1.4 Dangers

This instrument has been designed and constructed in accordance with state-of-the-art technology and the acknowledged safety regulations. Nevertheless, working with the instrument could cause danger to the life and health of the operator or to others, or damage to the instrument or other property. Therefore the instrument should only be used for its designated purpose, and in a perfect technical condition. Any defect that could have a negative effect on safety should be repaired and recorded.

1.5 Designated purpose

Scrub Abrasion and Washability Tester is exclusively designed to perform washability tests of painted and coated test panels as described within the specifications. TQC Sheen will not be held liable for damage resulting from improper use.

Designated purpose also includes properly observing all instructions in the operation manual, and adherence to inspection and maintenance schedules. TQC Sheen is entitled to request these form when warranty claims are made and during inspections to ensure safe operation and evaluate correct usage.

1.6 Copyright

The copyright of this operating manual remains with TQC Sheen. This operating manual is intended solely for the user and his personnel. Its instructions and guidelines may not be duplicated, circulated or otherwise passed on to others, neither fully, nor partly. Infringement of these restrictions may lead to legal action may be taken if this restrictions are infringed upon.

1.7 Manufacturer's/Supplier's address

TQC Sheen – Molenbaan 19
2908 LL Capelle aan den IJssel
The Netherlands
T +31(0)10 7900 100
F +31 (0)10 7900 129

2 SAFETY INSTRUCTIONS

2.1 Meaning of Symbols

The following symbols for dangers are used in this instruction manual.

Possible immediate danger to the life or health of personnel.	If this guideline is not noted it can lead to severe danger to health, up to fatal injury.
A dangerous situation could be caused.	Non observance of this guideline can lead to injury or to damage to equipment.
Special tips and particular information.	Guidelines to make optimal use of the instrument.

2.2 Availability of Safety Information

The instruction manual should be kept in proximity to where the instrument operates and should be visible and accessible at any time of operation.

In addition to the information contained in the instruction manual, general and local regulations for accident prevention and environmental protection shall be kept available and observed. Always ensure all guidelines in respect of safety and dangers on the instrument are in readable condition.

In case of danger the instrument has to be switched off by means of the on / off switch at the left back side of the instrument or by unplugging the mains power, then the danger should be eliminated.

2.3 Dangers from Electrical Energy

- Work on the electrical supply may only be done by a qualified electrician.
- The electrical equipment of the instrument must be checked regularly. Loose connections and cables damaged by heat must be corrected immediately.
- Always make sure the instrument's power is turned off while adjusting any electrical component.

Make sure that no paint or other liquids are spilled on the electronics

2.4 Modifications to the Equipment

- Any modifications or additions or alterations to the instrument may solely be made with permission from the manufacturer otherwise the warranty will be void.
- Instruments which are not in fault-free condition must immediately be switched off
- Only use replacement parts from the original supplier. Parts used from other sources aren't guaranteed to take the loading and meet the safety requirements.

3 TRANSPORT AND STORAGE

3.1 Packing

- Please take note of pictorial symbols on the packing.
- Check for transport damages. If the packaging is damaged only accept it with a written approval of the transporter that the package was damaged.

3.2 User: Check on Receipt

- Check packing for damage
- After unpacking check complete supply.

3.3 Reporting Transport Damage and Documentation

- Any damage should be documented as accurately as possible (possibly photographed) and reported to the relevant insurers or, in the case of sales "delivered to customers works", to the supplier.

3.4 Storage and Protective Measures when not in use

- The instrument must be stored in a dry place at a temperature between 10 - 40˚C / 50 - 104˚F.
- If packing is damaged upon receipt immediately inform the forwarder and make a note on the packing list and have it signed by the forwarder. Ideally make some pictures of the damage as well.
- Store instrument in the original packing if possible.

4 INSTRUMENT DATA

4.1 Name / Article

AB6000	Scrub Abrasion and Washability Tester
AB6010	Scrub Abrasion and Washability Tester Basic

4.2 Scope of Supply

Standard supplied

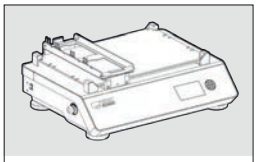

Scrub Abrasion and Washability Tester

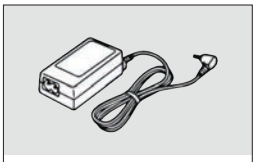

24 V Adapter + Power Cable

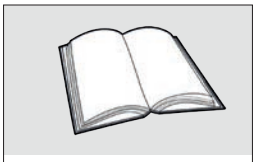

Manual

Only supplied with AB6000

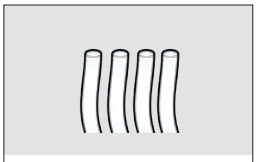

Tubing

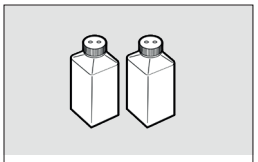

Fluid Containers

4.3 Technical Data

Traverse speed:	1 - 60 cycles per minute
Traverse speed accuracy:	+ / - 1% of set speed
Stroke length:	20 - 300 mm / 0.39 - 11.81 in
Stroke length accuracy:	+ / - 0.01 mm
Pump flow rate:	0.0 - 3.0 ml per minute / 0.0 - 0.79 GPH
Max. panel width:	70 mm
Max. panel length:	350 mm
Max. panel height:	35 mm

4.4 Dimensions and Weight

Depth:	490 mm / 19.3 in
Depth with pumps:	530 mm / 20.87 in
Width:	640 mm / 25.2 in
Height:	235 mm / 9.24 in
Weight:	30 - 35 kg / 66.14 - 77.16 lbs (depending on model)

4.5 Basic Unit

Power Supply:	24 VDC / 100 - 240 V / 50 - 60 Hz
Power consumption:	max. 50 Watt
Display:	480 x 272 pixel TFT display
Control:	5-key navigation switch (Mouse Keyboard optional)
Menu languages:	English, Spanish, Chinese, Polish, German, French, Italian, Japanese, Russian, Turkish

5 INSTRUMENT LAYOUT AND FUNCTIONS

5.1 Instrument Layout

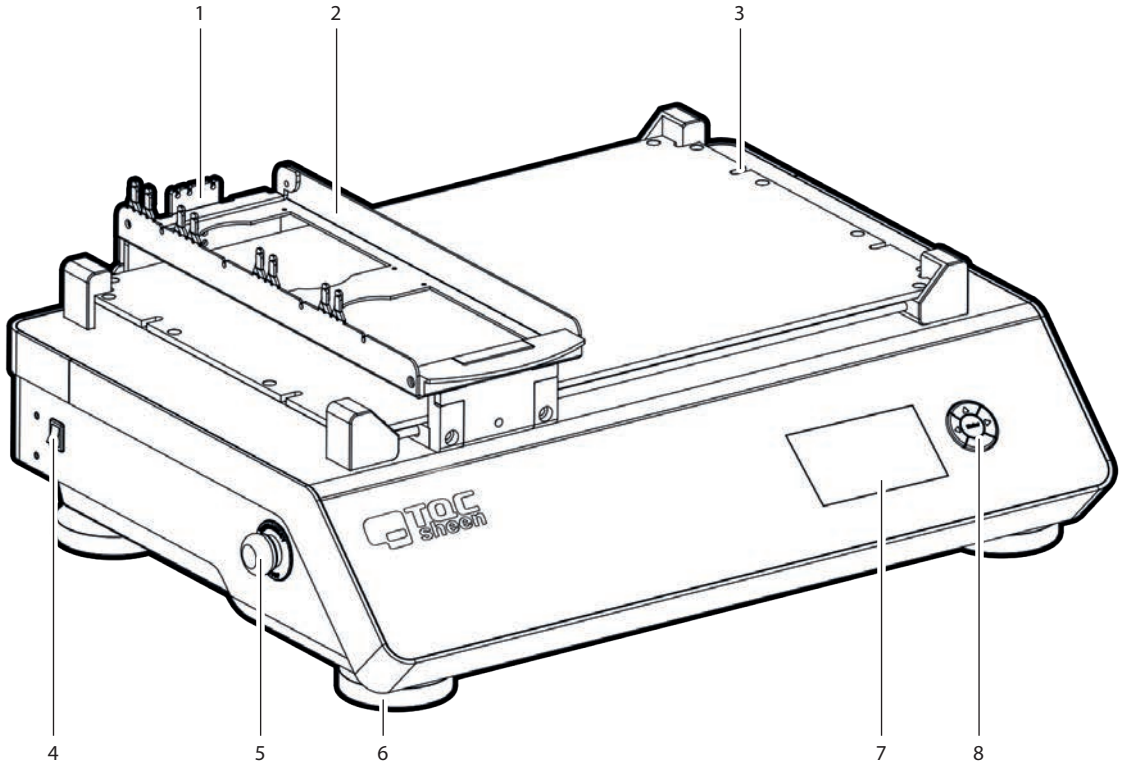

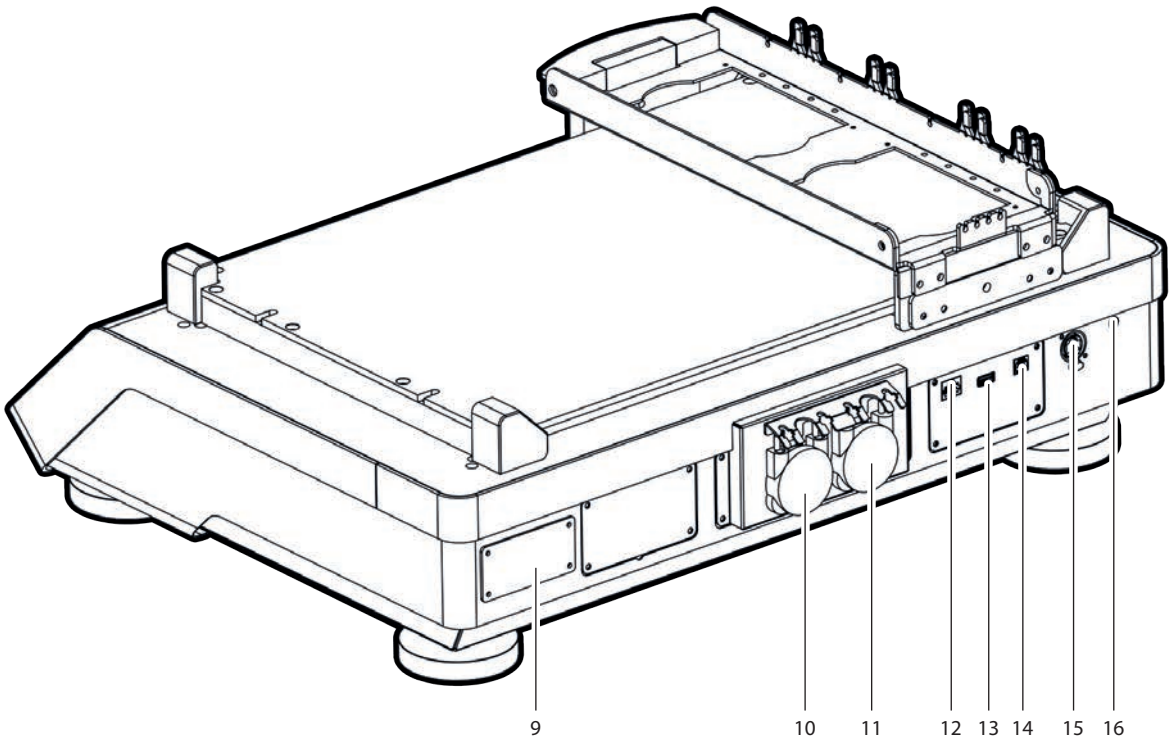

1 Tube Holder
2 Tool Carrier
3 Fixture Screws
4 Power Switch
5 Emergency Button
6 Adjustable Feet
7 Full Color Display
8 5-key Navigation Switch
9 Machine ID-Tag
10 Pump AB
11 Pump CD
12 Ethernet
13 USB-A
14 USB-B
15 TQC Sheen Bus
16 Power Entry

5.2 Connecting a Mouse and Keyboard

① The instrument can also be controlled by a mouse and/or keyboard.

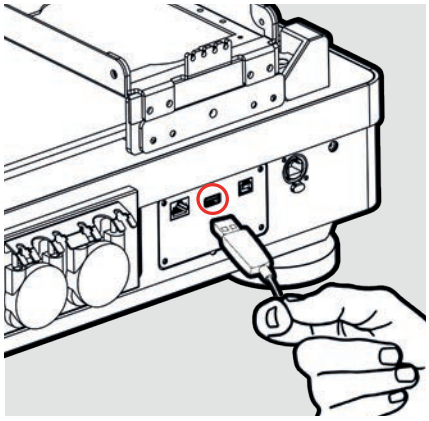

② Connect the mouse and/or keyboard to the USB-A port at the back of the instrument.

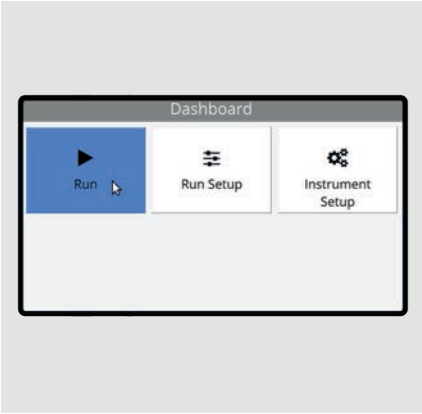

③ Clicking the left mouse button behaves the same as the OK button. (Not all input fields can be controlled by a mouse.)

6 INSTRUMENT PREPARATIONS

6.1 Installation

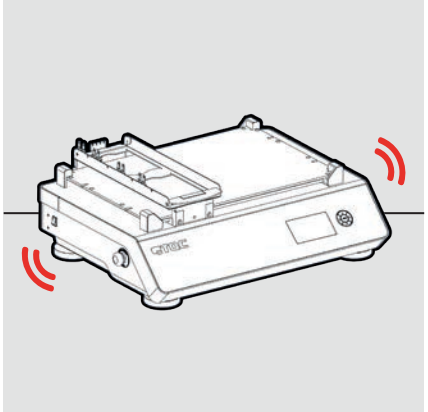

① The instrument has to be installed on a sturdy table or work area.

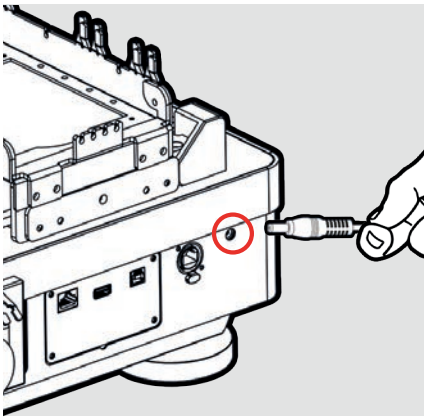

② Connect the power cable to the machine and a wall socket.

6.2 Tool Holders and Tools

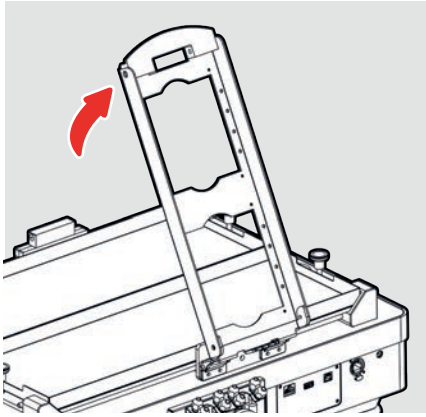

① Lift the Tool Carrier.

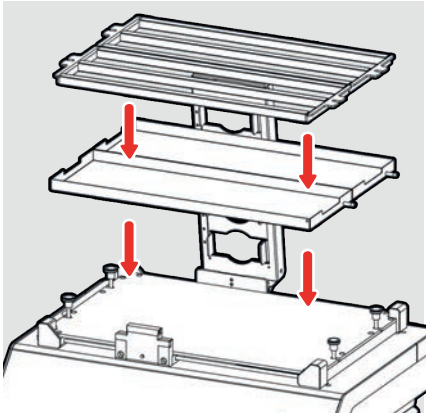

② Place the Test Beds and the Sample Clamp Frames. Then close the Tool Carrier.

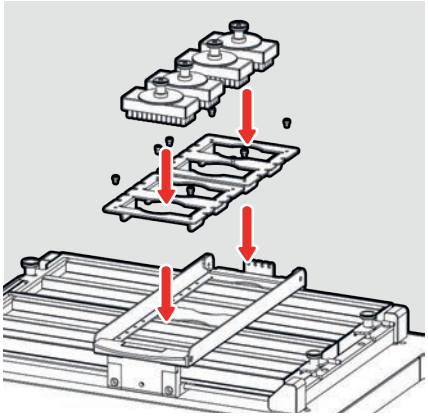

③ Place the Tool Holders first, then place the Tools.

6.3 Fluid Tubes

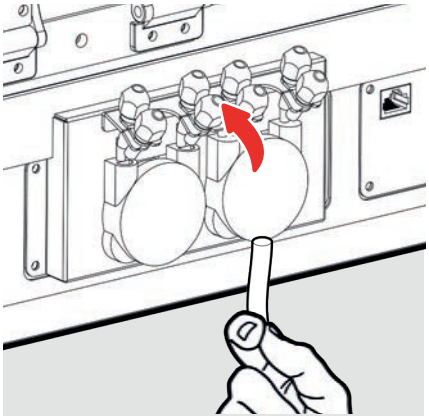

① Connect the tubes to the fluid pumps. The channels are marked on bracket.

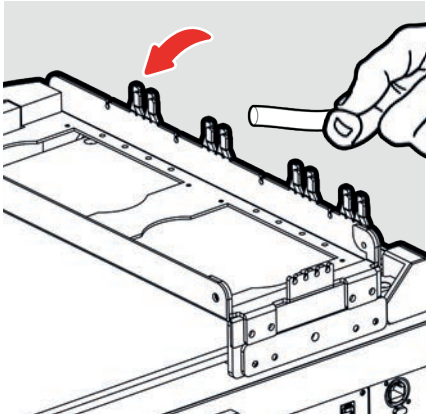

② Mount the tubes in the bracket on the Tool Carrier and place the correct tube at each channel.

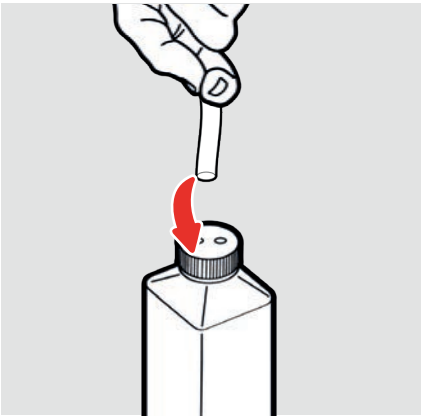

③ Connect the IN tubes from the pumps to the fluid containers.

7 NAVIGATION

7.1 Menu

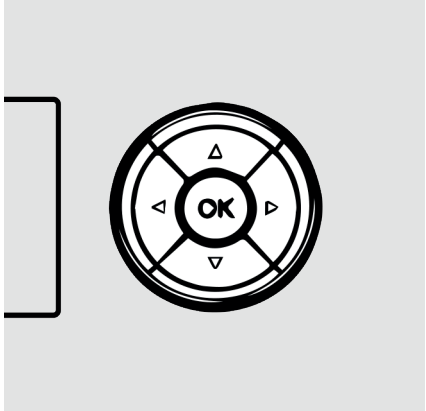

① Use the 5-key button to navigate through the interface. Red lights in the 5-key button indicate possible actions for the selected button.

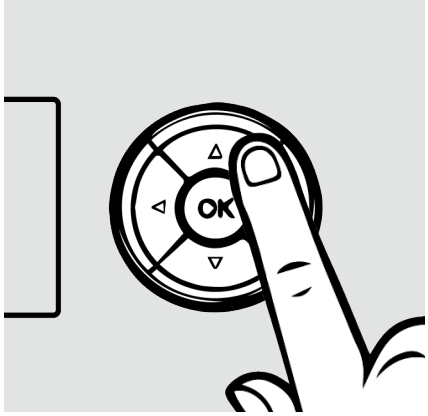

② You can change the selected button by pressing the arrows on the 5-key button.

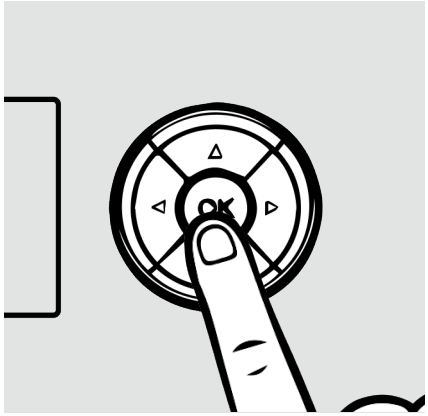

③ To confirm the selected button, press **OK** on the 5-key button.

7.2 Number Input

① Select the input and press **OK** to edit the value.

② Use the ▲ and ▼ buttons to increase or decrease the value. Hold the button to increase or decrease in bigger steps.

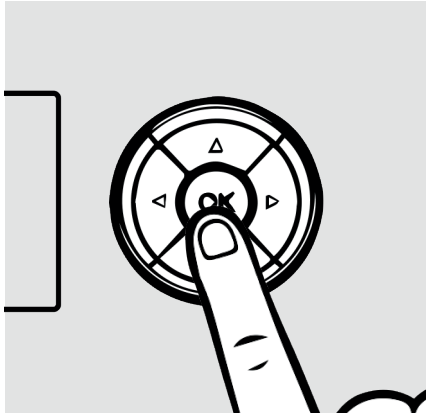

③ Press **OK** to stop editing.

7.3 Text Input

① Select the input and press **OK** to edit the value.

② Use the ◀ and ▶ buttons to select the character.

③ Use the ▲ and ▼ buttons to change the character.

8 OPERATION

8.1 Starting the Instrument

1 This screen will be displayed after turning on the instrument.

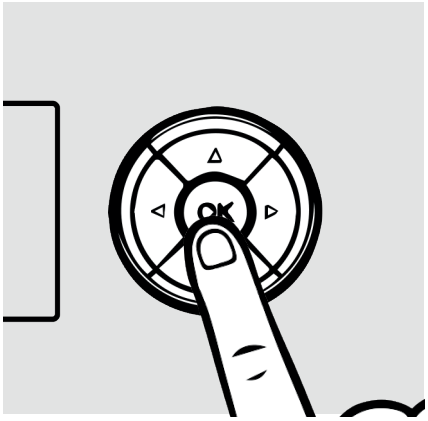

2 Press **OK** to initialize the instrument.

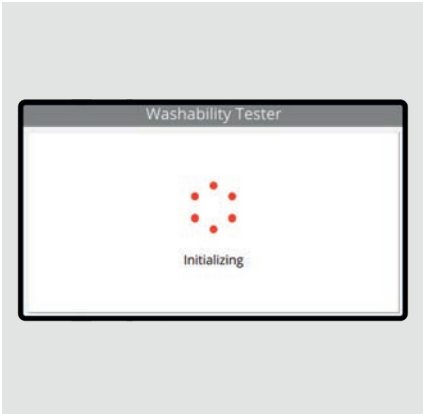

3 The instrument will check the system for any errors and the Tool Carrier will be calibrated.

Run
Click to start a new run.

Run Setup
Run related settings.

Instrument Setup
All instrument related settings.

8.2 Run

8.2.1 Run

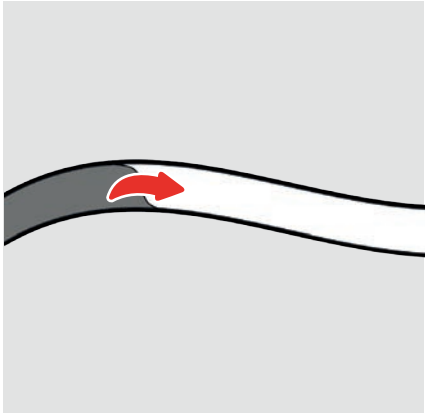

1 Check fluids presence at tip of tubes. (AB6000 only)

2 Follow the instructions on the display.

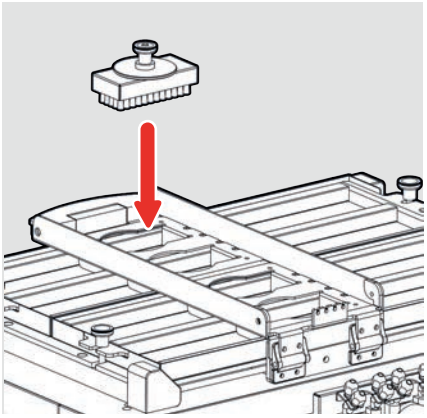

3 Place and secure tools.

4 Follow the instructions on the display.

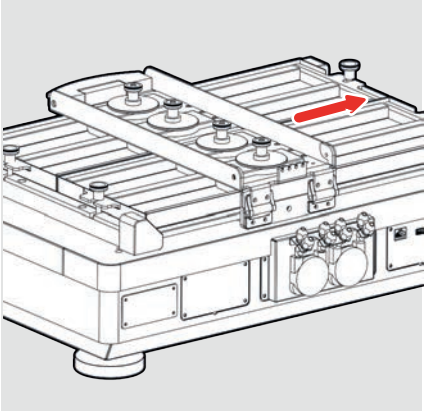

5 The Tool Carrier will now move. Stay clear from moving parts!

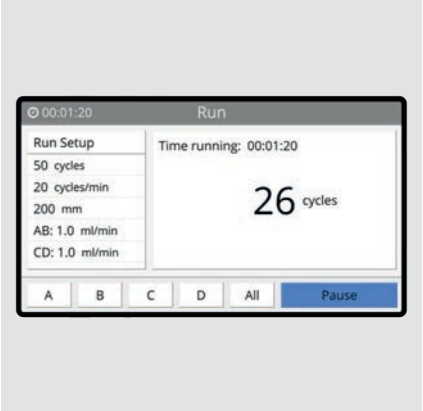

6 Click **A**, **B**, **C**, **or D** to mark a single channel at current cycles/time. Click **All** to mark all channels at current cycles/time. Click **Pause** to temporarily stop the test.

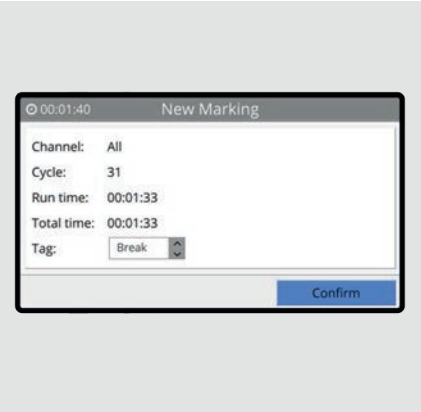

7 A name or description can be given to the marking. Click **Confirm** to save the marking.

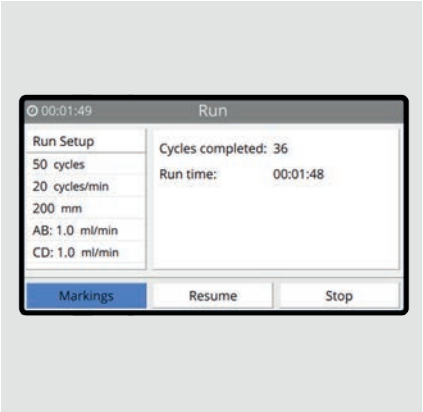

8 Click **Markings** to view all markings of the current run. Click **Resume** to continue the run. Click **Stop** to stop the run.

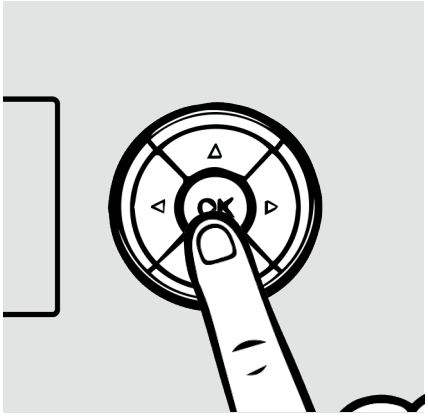

9 Use the ▲ and ▼ buttons to scroll through the list of markings. Click **Clear** to erase all current markings.

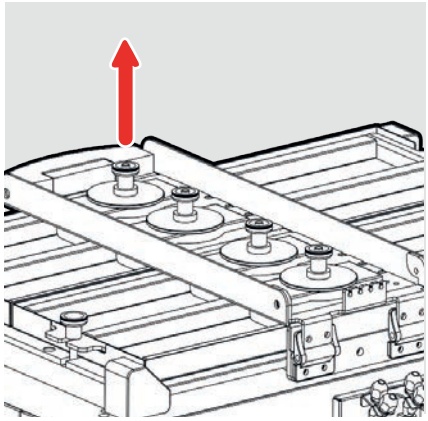

10 Tools may be removed when the Tool Carrier has stopped moving.

8.2.2 Manual Movement

① See steps 1 – 4 from chapter 8.2.1.

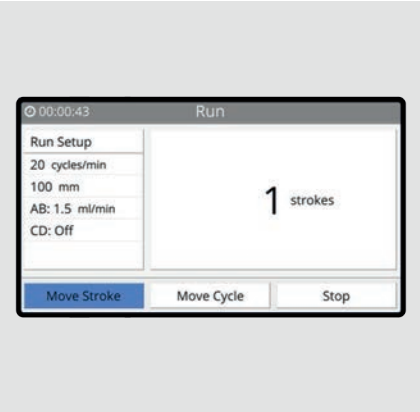

② Click **Move Stroke** to move the Tool Carrier a single stroke. (from Left to Right or Right to Left, depending on set Start Position)

③ Click **Move Cycle** to move the Tool Carrier a single cycle.

④ Click **Stop** to stop the run.

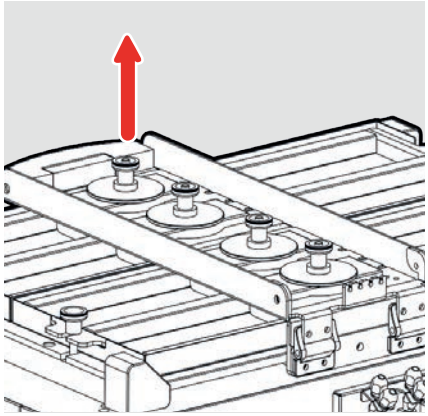

⑤ Tools may be removed when the Tool Carrier has stopped moving.

8.3 Run Setup

① Run settings are set in Manual, Custom or Standard. The red checkmark indicates the active setup.

② Click to set the movement start position to Left or Right.

8.3.1 Manual

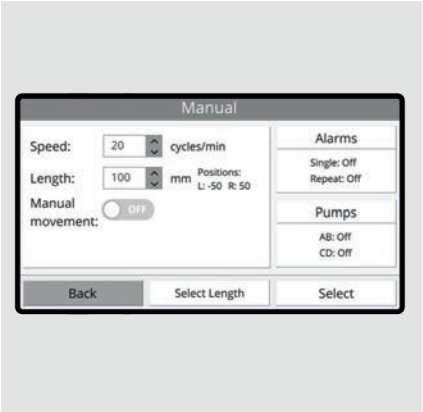

1 Set the speed and length.

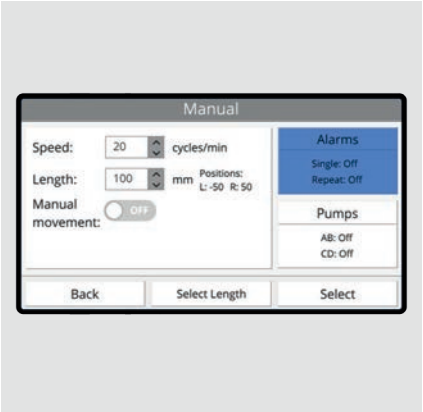

2 Click **Alarms** to configure the alarms settings. Click **Pumps** to configure the pumps settings. (AB6000 only)

3 If uncertain about the left and right position, use **Select Length** to determine the positions. See 8.3.7.

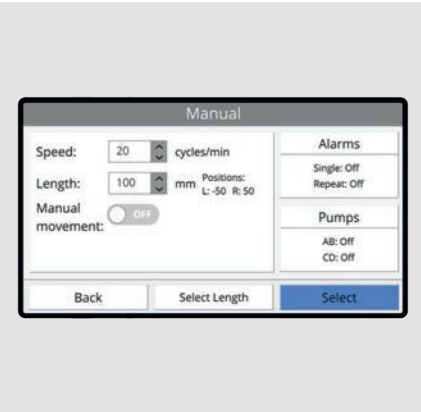

4 Click **Select** to use the manual setup.

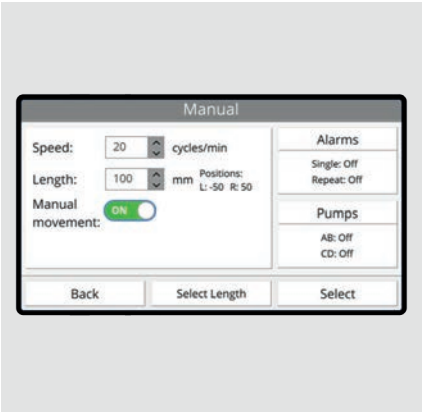

5 Enable **Manual Movement** for manual control of the Tool Carrier in a run.

Manual Movement
Instead of automatic movement, the user can move the Tool Carrier a single stroke or cycle by the click of a button. See 8.2.2 for more information.

8.3.2 Alarms

1 Single alarm will make a sound once at set number of cycles. Enable **Stop** at alarm to stop the Tool Carrier when an alarm is triggered.

2 Repeat alarm will make a sound at set interval.

3 Click **Back** to save the alarm settings.

8.3.3 Pumps

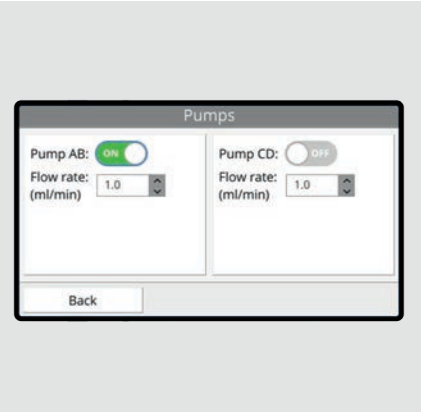

① Enable or disable a pump.

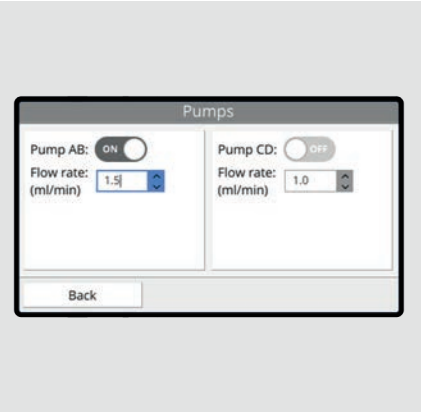

② Set the flow rate speed.

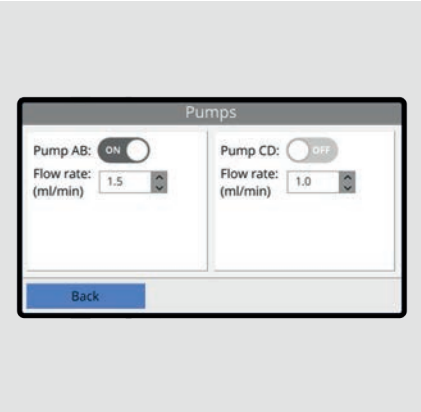

③ Click **Back** to save the pumps settings.

8.3.4 Custom Presets

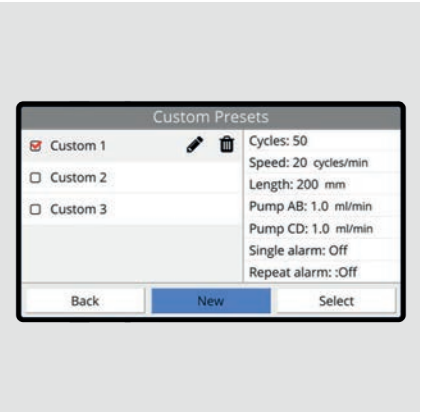

① Click **New** to create a new custom preset.
Click ✎ to edit the selected preset.
Click 🗑 to delete the selected preset.

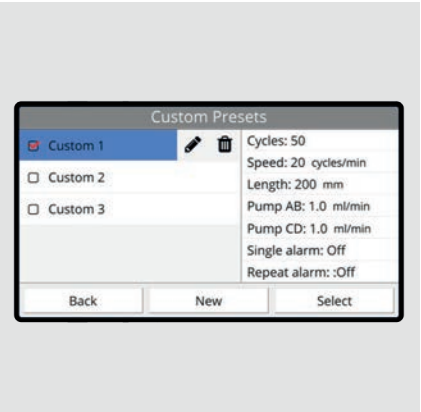

② The selected preset's settings are listed on the right.

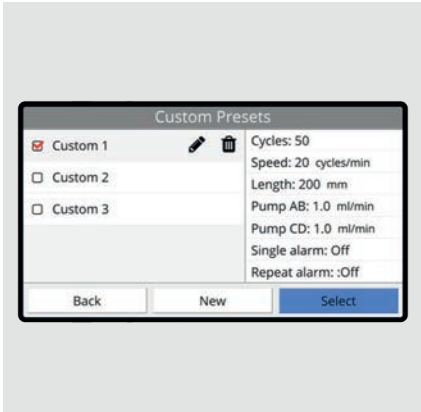

③ Click **Select** to use the selected custom preset.

8.3.5 New Custom Preset

① Similar to Manual, set the A, B, C, and D.
A name can be given to the custom preset.

② Click **Alarms** to configure the alarms settings. Click **Pumps** to configure the pumps settings. (AB6000 only)

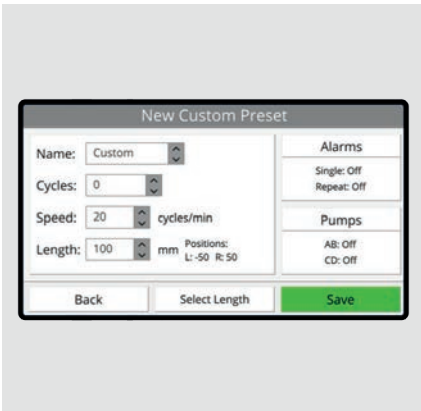

③ Click **Save** to save the new custom preset. The new preset will be listed in the Custom Presets menu.

8.3.6 Standard Presets

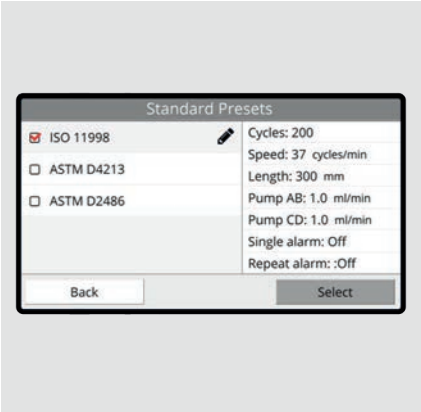

1 Predefined presets according several standards.

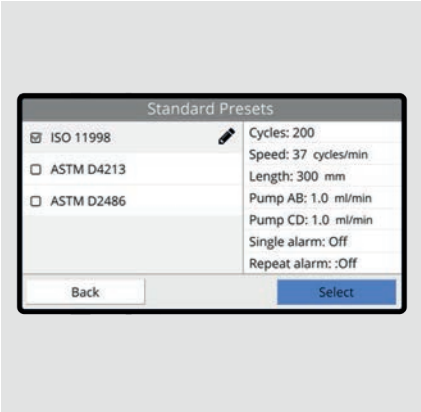

2 Click **Select** to use the selected standard preset.

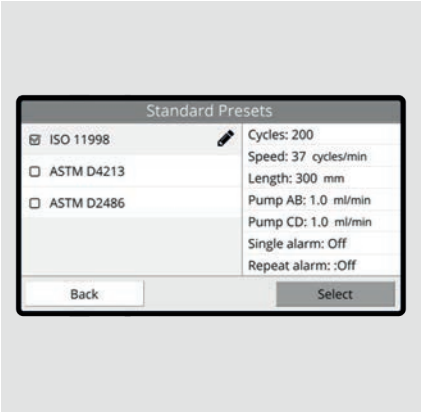

3 Click ✎ to edit the number of cycles.

8.3.7 Select Length

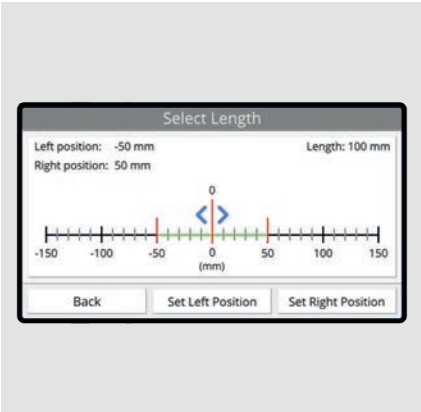

1 Move the tool carrier by using the ◀ and ▶ buttons. Make sure the Tool Carrier can move freely.

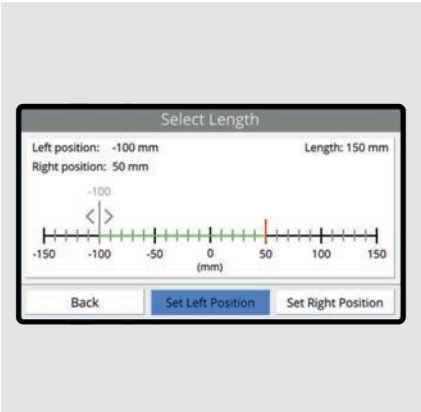

2 Click **Set Left Position** to set the current position as left position.

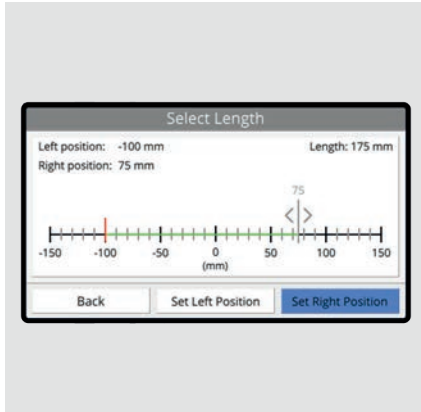

3 Click **Set Right Position** to set the current position as right position.

8.3.8 Test Positioning

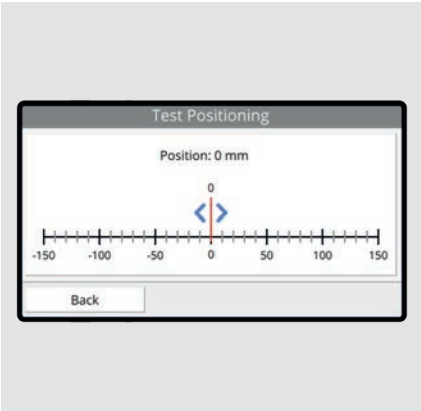

1 Use the ◀ and ▶ buttons to move the Tool Carrier. Left and Right position for irregular test objects can be determined.

8.3.9 Flush System (AB6000 only)

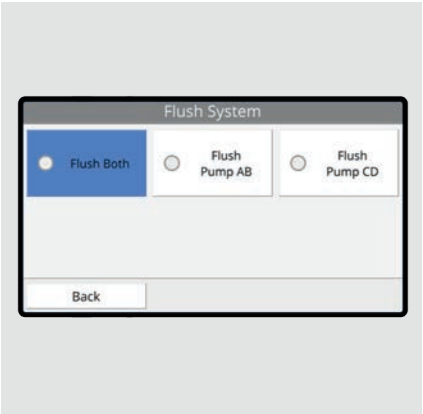

1 Click **Flush Both** to start both fluid pumps.

2 Click **Flush Pump AB** or **Flush Pump CD** to start one of the pumps.

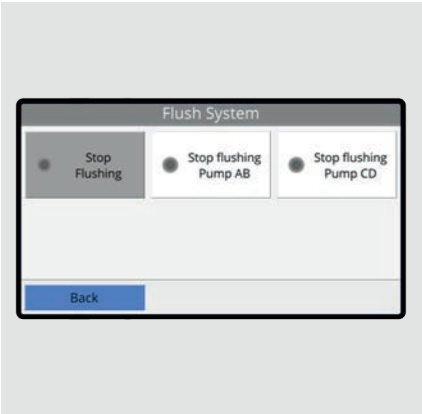

3 Click **Back** to return to the Run Setup menu. Active pumps will be stopped.

9 INSTRUMENT SETUP

9.1 Instrument Setup Menu

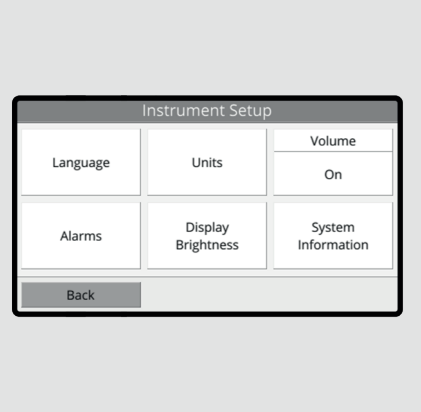

1. This menu contains all instrument related settings and information about the system.

2. Select the desired language and click **Back** to change the systems language.

9.2 Units

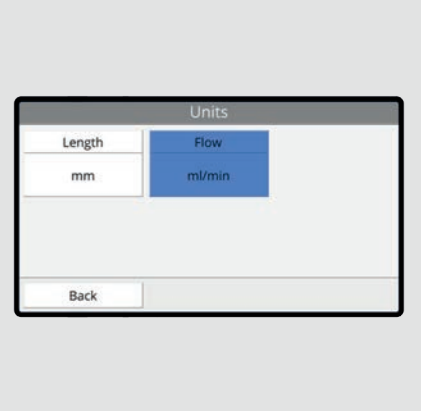

1. Click **Length** to set the length unit. Options are: Millimeter, Centimeter or Inch.

2. Click **Flow** to set the flow unit. Options are: Millimeter per second or Gallons per Hour. (AB6000 only)

9.3 Alarms

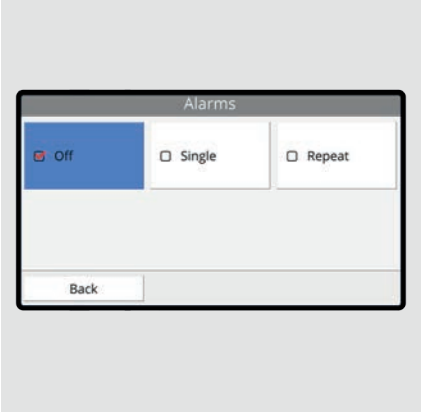

Off
Alarms will make no sound.

Single
Alarms will make a sound once.

Repeat
Alarms will repeat a sound, until turned off.

9.4 Display Brightness

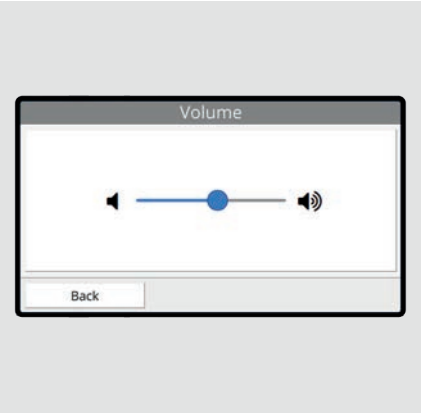

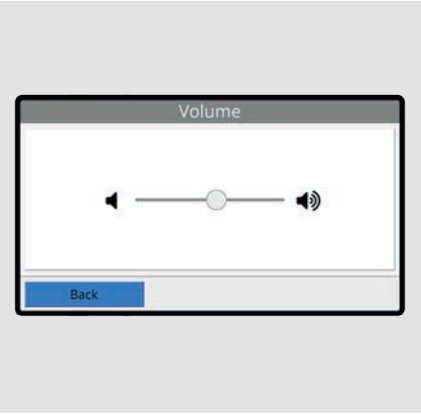

1. Use the ◀ and ▶ buttons to change the brightness level of the display.
2. Click **Back** to save the brightness level.

9.5 System Information

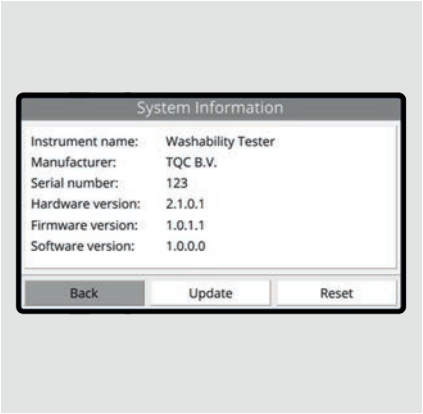

1. Information about the instrument is listed here. When requesting support, always provide the serial number and the versions. (Versions may be different than listed here.)
2. Information about updating the system will be given when an update is released.
3. Click **Reset** to reset presets.

9.6 Reset

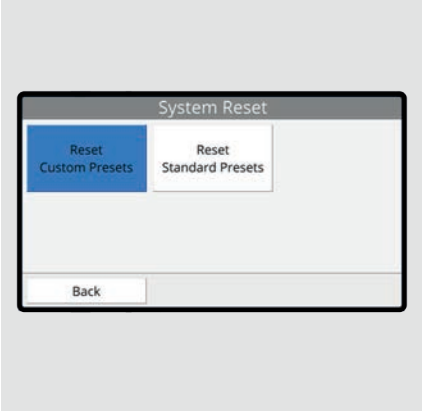

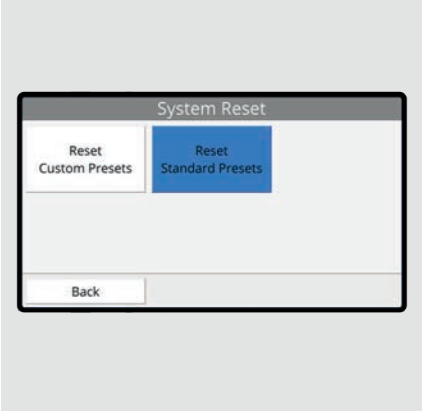

1. Click **Reset Custom Presets** to remove all custom presets.
2. Click **Reset Standard Presets** to set the standard presets to their default values.

Warning: this action cannot be reversed. Saved presets will be lost.

10 MECHANICAL

10.1 Test Beds

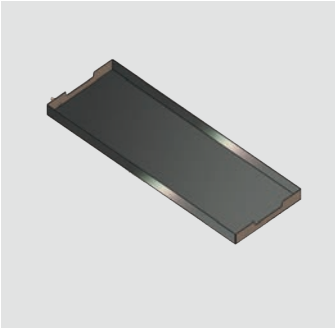

AB5196
Dimensions: 480x165x18 mm

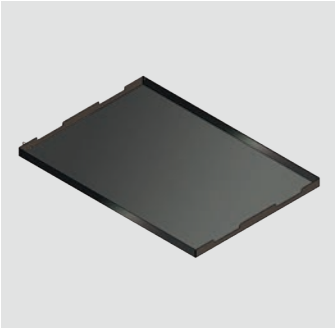

AB5176
Dimensions: 480x330x18 mm

The Scrub, Abrasion and Washability Tester can be supplied with 2 types of test beds. Either one AB5176 covering the full width of the machine or one or two AB5196, covering either half the width or the full width.

Placement
Dependent on the model either two narrow or one wide test bed is placed flat on the top plate of the Washability tester.

AB6000 and AB6010 can be used without the test beds when used for dry abrasion testing. Following rules have to be applied:

- The sample shall not protrude from the test bed.
- The sample shall be positioned such that it will not move.
- The sample shall not block any of the movement of the TQC Sheen Scrub Abrasion and Washability Tester.

10.2 Sample Clamp Frames

ABAB5045

AB5197

In order to hold samples down the scrub, abrasion and washability tester shall be equipped with one of the following sample clamp frames. These can be used on both test bed models AB5196 and AB5176. The total machine can contain two frames at a time.

Placement
The sample frames are with the indentation on each side up such that they can be fixed using the fixture screws of the Scrub Abrasion and Washability Tester. The Rubber seals beneath the clamping frames are made out of Viton rubber. The chemical resistance of this rubber is expressed in annex B.

10.3 Tool Holders

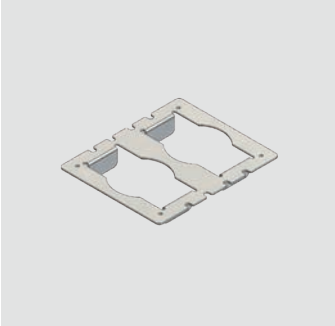

AB5041

AB5042

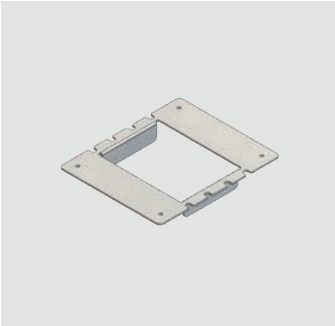

AB5043

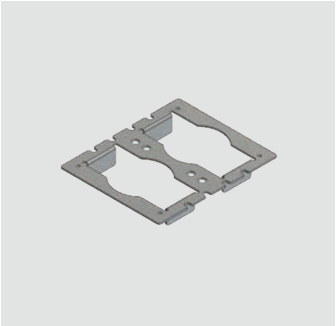

AB5044

The Scrub, Abrasion and Washability Test is equipped with a universal traverse as of 01-04-2016. Earlier models have a standard configurated traverse containing tool holders equal in function to AB5041. Models after 01-04-2016 have a configurable traverse allowing for a flexible arrangement of the tools. The tool holders are linked to the tools in use and the frames that are used. Please use the online Ordering Matrix to select the proper tool holder in correlation to the clamping frame and tool in use. The shown models are available and all have the same installation.

Placement
Place the tool holder in the designated part of the traverse and secure it with the 4 screws supplied with each tool holder. Always make sure the tool holder is properly secured with the guides for the tools facing downward.

10.4 Tools

The TQC Sheen Scrub, Abrasion and Washability Tester can be supplied with a wide range of tools. These tools are all selected and produced with the greatest care. Please see the Ordering Matrix to select the correct tool for the appropriate standard. You can download the Ordering Matrix at **www.tqc.eu/en/product/TQC-scrub-abrasion-and-washability-tester/** under the tab documents.

10.4.1 Small Sponge (AB5012)

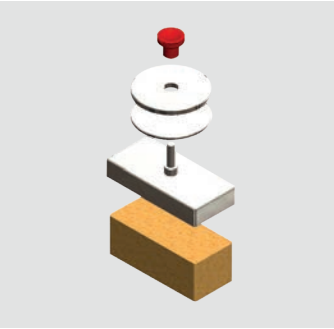

The small sponge holder is supplied ready for use. The sponge is a gentle tool to test the washability of the coating. Often used for cleanability tests of for example wall paints.

Placement
The AB5012 sponge tool is placed in the AB5042 or AB5041 holder and needs to fit comfortably in the holder. The tool must be able to move freely without friction in the holder. Always position the tool facing the same way, to create the best homogeneity in results. For replacement intervals check the appropriate standard.

Scope of supply:
- Sponge
- Sponge Holder
- Weight 60 g / 0.13 oz
- Weight 100 g / 0.22 oz
- Fixation Screw

Specifications Sponge Tool Complete

Mass:	508 g / 17.92 oz
Standards:	ASTM D4213-92, ASTM D4828

Specifications Sponge Tool Holder

Material:	Stainless steel
Inner dlmensions:	92x41 mm
Outer dimensions	94x43 mm

10.4.2 Wild Boar Brush (AB5010)

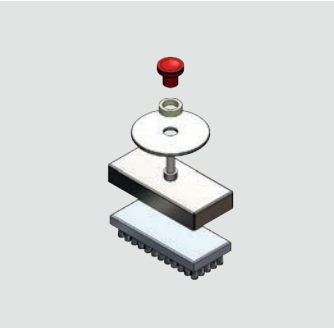

The wild boar brush holder is supplied ready for use. The brush is used to test scrub resistance of coatings. The brushes are not worn in. This needs to be done on the machine of the user.

Placement
The AB5010 Wild boar hair tool is placed in the AB5042 or AB5041 holder and needs to fit comfortably in the holder. The tool must be able to move freely without friction in the holder. Always position the tool facing the same way, to create the best homogeneity in results. For replacement intervals check the appropriate standard.

Scope of supply
- Wild boar brush
- Brush holder
- Weight

Specifications Wild Boar Brush Tool Complete

Mass:	250g/8.82oz
Standards:	DIN 53778

Specifications Brush Holder

Inner dimensions:	92x41 mm
Outer dimensions:	94x43 mm
Material:	Stainless steel

Specifications Wild Boar Brush

Material:	Wild boar hair
Mass:	60 g / 0.13 oz

10.4.3 Nylon Brush (AB5011)

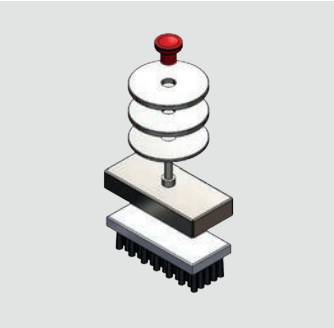

The nylon brush brush holder is supplied ready for use. The brush is used to test scrub resistance of coatings. The brushes are not worn in. This needs to be done on the machine of the user.

Placement
The AB5011 nylon brush tool is placed in the AB5042 or AB5041 holder and needs to fit comfortably in the holder. The tool must be able to move freely without friction in the holder. Always position the tool facing the same way, to create the best homogeneity in results. For replacement intervals check the appropriate standard.

Scope of supply
- Nylon brush
- Brush holder
- Weight 60 g / 0.13 oz
- Weight 100 g / 0.22 oz
- Fixation screw

Specifications Nylon Brush Tool Complete

Mass:	454 g / 16.01 oz
Standards:	ASTM D2486

Specifications Brush Holder

Material:	Stainless steel
Inner dimensions:	92x41 mm
Outer dimensions:	94x43 mm

10.4.4 Abrasive Pad Tool (AB5013)

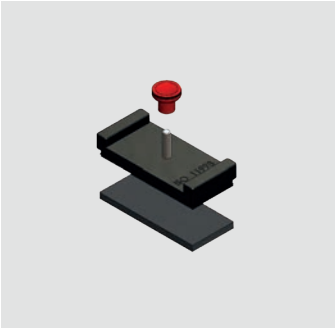

The Abrasive Pad Holder is supplied ready for use. The pad is used to test scrub resistance of coatings. The pads cause an aggressive wear of the coating.

Placement
The AB5013 Abrasive Pad Tool is placed in the AB5042 or AB5041 holder and needs to fit comfortably in the holder. The tool must be able to move freely without friction in the holder. Always position the tool facing the same way, to create the best homogeneity in results. For replacement intervals and maximum life please check the appropriate standard.

Scope of supply
- Abrasive pad
- Pad holder
- Fixation screw

Specifications Abrasive Tool Complete

Mass:	135 g / 4.76 oz

Specifications Aluminium Pad Holder

Material:	Aluminium
Inner dimensions:	92x41 mm
Outer dimensions:	94x43 mm

10.4.5 Universal Material Clamp (AB5020)

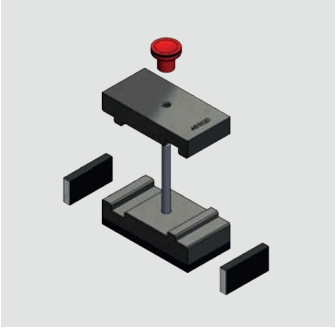

The Universal Material Clamp Tool is designed to hold abrasive media as sandpaper, cloth, towel material, etc. The rubber lining on the bottom create a uniform pressure on the bottom. The rubber pads on each side allow for the size adjustment to any thickness of cloth.

Placement
The AB5020 Universal Material Clamp Tool is placed in the AB5042 or AB5041 holder and needs to fit comfortably in the holder. The tool must be able to move freely without friction in the holder. Always position the tool facing the same way, to create the best homogeneity in results. For replacement intervals and maximum life please check the appropriate standard.

Scope of supply
- Clamp tool upper part with fixation screw
- Clamp tool lower part with rubber lining on the bottom and a separate rubber lining for both short sides

Specifications
Universal Material Clamp Tool. Assembly of two black anodised aluminum blocks with rubber lining into which user-selected abrasive material can be clamped.

Dimensions:	75x40x80 mm (without rubber lining on the short sides)

10.4.6 MEK / Crockmeter Tool (AB5060)

The AB5060 MEK / Crockmeter is designed to perform several types of MEK / Crockmeter tests, depending on the configuration used. A full set weighs 200g. The hollow fixation screw allows for easy filling of the liquid reservoir in the stamp.

Placement
The AB5060 MEK / Crockmeter tool is placed in the AB5042 or AB5041 holder and needs to fit comfortably in the holder. The tool must be able to move freely without friction in the holder. Always position the tool facing the same way, to create the best homogeneity in results. For replacement intervals and maximum life please check the appropriate standard.

Scope of supply
- TQC Sheen MEK / Crockmeter tool
- Weight
- Set of felts and Viton O-rings

Specifications

Required Mass:	454 g
Standard Delivery:	200g
Order extra (not included):	+ 1x AB5065 (54 g) + 2x AB5015 (100g)

Required Mass:	900g
Standard Delivery:	200g
Order extra (not included):	+ 1x AB5015 (100g) + 3x AB5066 (200g)

10.4.7 Large Sponge Tool (AB5050)

The Large Sponge Tool is supplied ready for use. The sponge is a gentle tool to test the washability of the coating. Often used for cleanability tests on for example wall paints.

Placement
The AB5050 Sponge Tool is placed in the AB5043 holder and needs to fit comfortably in the holder. The tool must be able to move freely without friction in the holder. Always position the tool facing the same way, to create the best homogeneity in results. For replacement intervals check the appropriate standard.

Scope of supply
- Sponge
- Sponge holder
- Weight 500 g
- Fixation screw

Specifications Sponge Tool Holder

Material:	Stainless steel
Inner dimensions:	90x75 mm
Outer dimensions	102x78mm

10.4.8 TQC Sheen Cloth Holder (AB5055)

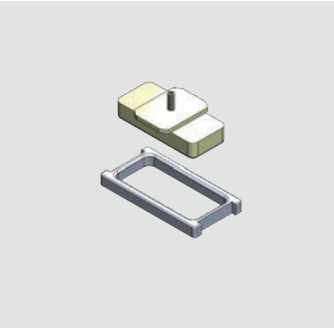

The TQC Sheen Cloth Holder is supplied ready for use. The tool is suitable for clamping flexible test media around the test body. Allowing for a smooth testing.

Placement
The AB5055 Cloth Holder can only be placed in the AB5044 tool holder and needs to fit comfortably in the holder. The tool must be able to move freely without friction in the holder.

Scope of supply
- Cloth holder body
- Cloth holder frame

SpecificationsC Cloth Holder Body

Material:	POM
Dimensions:	90x54*x30 mm
	* Width of the block is 40 mm

Specifications Cloth Holder Frame

Material:	Anodised aluminium
Inner dimensions:	91x41x12 mm
Outer dimensions:	110x51x12 mm

10.4.9 Metal Shim (AB5025)

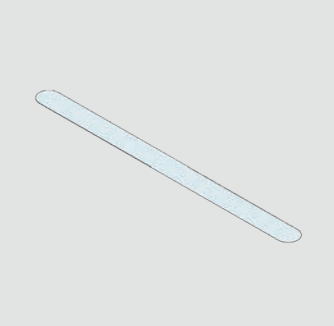

The metal shim is usually placed in the middle and underneath of the test sample. The small elevation will increase abrasion at that point hence test results are obtained more quickly.

Scope of Supply
- 4 metal shims with rounded corners

Specifications

Material:	Stainless steel
Dimensions:	0.25x12x158 mm

Please verify proper use of the shims by appropriate standard and or specification.

10.4.10 Glass Bed (AB5180)

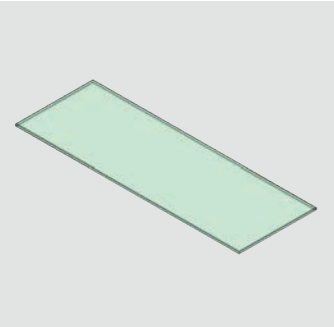

Some standards require all tests to be performed on a glass test bed. This to ensure the flattest and smoothest substrate for the test. Often the glass bed is used together with the metal shims for many ASTM standards.

Scope of Supply
- 2 glass plates with champhered edges

Specifications

Material:	Glass
Dimensions :	470x163x6 mm

10.4.11 Heavy Weight Support Tool (AB5032)

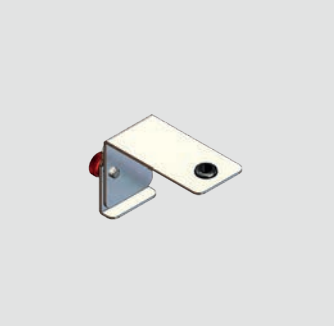

When using top heavy tools the risk exists for a tool to tip over due to the load, or the used speed. Instable tools cause irregular wear and will lead to non-reproducible results. A tipped over tool can significantly scratch the sample and damage it beyond use. The heavy weight support tools are used to stabilize the tools by creating a fixture point on the vertical axis of the tool. Per tool 1 heavy weight support tool is required. When a lighter weight is used, mount the supplied spacers between the weight and the tool.

Scope of supply
- 1 heavy weight support tool
- 1 fixture screw

Specifications

Material:	Stainless steel and plastic
Dimensions :	94x50x50 mm (adjustable hight: 50 - 75 mm)
Mass:	14 g

10.4.12 Tubing (AB5115 and AB5113)

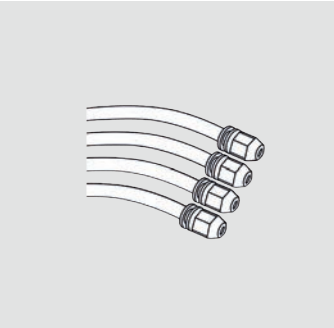

The Scrub, Abrasion and Washability Tester AB5000 and AB5005 are equipped with pumps for the application of test liquids to the samples. These tubes do require maintenance and timely replacement depending on the liquids that are pumped. The chemical resistance of the tubes is covered in the chemical resistance table. The wear of the tubes depends both on the abrasiveness and aggressiveness of the media used. It is not possible to predict the life expectancy of a tube.

Scope of Supply
- AB5115 General tubing set
- 1 set of tubes suitable for installation between container and pump and from the pump to the test area's
- AB5113 Pump tubing kit
- 4 tubes for installation in the pumps

Specifications

Pump tubing:	BPT Pharmamed tube
Tubing to pump and from pump :	Tygon (at delivery PVC tube to the pump)

Additional information

Waste / drainage tube :	Silicon tube

11 CARE AND MAINTENANCE

- Though robust in design, this instrument is precision-machined. Never drop it or knock it over.
- Always clean the instrument after use.
- Clean the instrument using a soft dry cloth. Never clean the instrument by any mechanical means such as a wire brush or abrasive paper. This may cause, just like the use of aggressive cleaning agents, permanent damage.
- Do not use compressed air to clean the instrument.
- Never bend or exert extreme forces on the tool carrier
- Generally the TQC Sheen Scrub Abrasion and Washability Tester does not require any maintenance.

Make sure that no paint or other liquids are spilled on the electronics or left in the tubing.

11.1 Disposal of Materials

Disposal of materials used in the operation of the instrument or for auxiliary functions and exchanged items should be dealt with safety and in a manner that will not harm the environment. Follow the local regulations.

11.2 Customer Service

Customer service is provided on request by

TQC Sheen
Molenbaan 19 , 2908LL Capelle aan den IJssel - The Netherlands,
T +31(0)10 7900100, F +31 (0)10 7900129 or by local representatives.

12 DISCLAIMER

The right of technical modifications is reserved.

The information given in this manual is not intended to be exhaustive and any person using the product for any purpose other than that specifically recommended in this manual without first obtaining written confirmation from us as to the suitability of the product for the intended purpose does so at his own risk. Whilst we endeavor to ensure that all advice we give about the product (whether in this manual or otherwise) is correct we have no control over either the quality or condition of the product or the many factors affecting the use and application of the product. Therefore, unless we specifically agree in writing to do so, we do not accept any liability whatsoever or howsoever arising for the performance of the product or for any loss or damage (other than death or personal injury resulting from our negligence) arising out of the use of the product. The information contained in this manual is liable to modification from time to time in the light of experience and our policy of continuous product development.

ANNEX A | STANDARDS CONFIGURATION TABLE

x = mandatory
o = optional

Art. No.	Description	DIN 53778	ASTM D2486	ASTM D4213-92	ASTM D4828	ISO 11998 / EN13300	ASTM D3450	ASTM D4213 (from 1996)	MEK test / DIN 55654 / ISO 105-X12S4.2.1
	Scrub Test Basic Device								
AB6000	Scrub Abrasion and Washability Tester	x	x	x	x	x	x	x	x
AB6010	Scrub Abrasion and Washability Tester Basic		x	x	x		x	x	x
	Test beds								
AB5196	Reservoir low, half	x	x	x	x	x	x	x	x
AB5176	Reservoir low, full	o	o	o	o	o	o	o	o
	Clamping frames								
AB5045	Wide channel single frame for low reservoir	x	x			x			x
AB5197	Double narrow channel frame for low reservoir	o	o	x	x	o	x	x	o
	Tool adapter (WARNING: The adapter must be compatible with the clamping frame)								
AB5041	Tool adapter "Double" for tools AB5012/5010/5011/5013/5020	x	x			x			x
AB5042	Tool adapter "Single" for tools AB5012/5010/5011/5013/5020	o	o			o			o
AB5043	Tool adapter "Single" for tool AB5050			x	x		x	x	
AB5044	Tool adapter "Double" for tool AB5055								
	Tools								
AB5010	Wild Boar Brush (250g/8.82oz) DIN 53778	x							
AB5011	Nylon Brush (454g/16.01oz) ASTM D2486		x						
AB5012	Sponge (232g/8.12oz)								
AB5013	Abrasive pad (232g/8.12oz) ISO 11998					x			
AB5020	Universal holder								
AB5050	Sponge tool, large, conform ASTM D4828 / D3450 (500g)(excl weights)			x	x		x	x	
AB5055	Cloth holder tool for detergents test								
AB5060	MEK Test / Crock meter								x
	Accessories								
AB5014	Weight for Washability test 60g								
AB5015	Weight for Washability test 100g								
AB5030	Weight for Washability test 1000g						o		
AB5040	Weight for Washability test 500gr						o		
AB5032	Tool stabilization kit for heavy weights	o	x	o	o	o	x	o	
AB5025	Metal shims for ASTM D2486, for reservoir half (set of 4)		x						
AB5027	Metal shims for ASTM D2486, for reservoir full (set of 4)		o						
AB5180	Glass base conform ASTM D2486 (set of 2)	x	x	x	x		x	x	

Art. No.	Description	DIN 53778	ASTM D2486	ASTM D4213-92	ASTM D4828	ISO 11998 / EN13300	ASTM D3450	ASTM D4213 (from 1996)	MEK test / DIN 55654 / ISO 105-X12S4.2.1
	Consumables								
AB5016	Abrasive pads for tool AB5013, set 5 pcs (Weight each appr. 3 g.)					x			
AB5016	Abrasive pads for tool AB5050, set 5 pcs			x				x	
AB5017	Wild boar brush for tool AB5010	x							
AB5018	Nylon brush for tool AB5011		x						
AB5018	Sponge pads for tool AB5050, set 5 pcs			x	x		x	x	
AB5019	Sponge pads for tool AB5012, set 5 pcs							o	
VF2316	TQC Sheen opacity scrub charts, black and white, 100 pieces	o			o	o			
	Spare parts								
AB5140	Glass container 500ml								
AB5142	Glass container cap yellow								
AB5141	Glass container cap green								
AB5113	Pump tubes set of 4								

ANNEX B | CHEMICAL RESISTANCE

Chemical	PVC	BPT Pharmed tube	Tygon	Silicone	Viton
Acetaldehyde	D	D	D	A	D
Acetamide	D	N/A	D	B	B
Acetate Solvent	D	N/A	D	C	D
Acetic Acid	D	N/A	D	C	B
Acetic Acid 20%	D	A	D	B	B
Acetic Acid 80%	C	N/A	D	B	B
Acetic Acid, Glacial	D	N/A	D	B	D
Acetic Anhydride	D	A	D	C	D
Acetone	D	D	D	D	D
Acetone, 50% water	D	N/A	N/A	A2	D
Acetyl Bromide	D	C	D	N/A	N/A
Acetyl Chloride (dry)	C	C	D	C	A
Acetylene	A1	N/A	A1	B	A
Acrylonitrile	B1	N/A	D	D	D
Adipic Acid	A2	N/A	D	N/A	A2
Alcohols: Amyl	A2	N/A	D	D	A
Alcohols: Benzyl	D	N/A	D	N/A	A
Alcohols: Butyl	A2	N/A	A2	B	A
Alcohols: Diacetone	B1	N/A	B1	D	D
Alcohols: Ethyl	C	N/A	C	B	A
Alcohols: Hexyl	A2	N/A	A2	B	C
Alcohols: Isobutyl	A1	N/A	A1	A	A
Alcohols: Isopropyl	A1	N/A	D	A	A
Alcohols: Methyl	A1	N/A	A1	A	C
Alcohols: Propyl	A1	N/A	A1	A	A
Allyl Chloride	D	N/A	N/A	N/A	A3
Aluminum Acetate (saturated)	A	A	N/A	D	A
Aluminum Chloride	A2	A	A2	B	A
Aluminum Chloride 20%	A1	A	A1	B	A
Aluminum Fluoride	A2	N/A	A2	B	A
Aluminum Hydroxide	A2	A	A2	N/A	A
Aluminum Nitrate	B2	A	B2	B1	A2
Aluminum Potassium Sulfate 10%	A2	A	A2	A	A
Aluminum Potassium Sulfate 100%	A2	A	A2	A	A
Aluminum Sulfate	A2	A	A2	A	A
Amines	D	N/A	D	B	D
Ammonia 10%	B1	a	B1	N/A	D
Ammonia Nitrate	B	a	B	N/A	D
Ammonia, anhydrous	A2	a	B	C	D
Ammonia, liquid	A1	a	A2	N/A	D
Ammonium Acetate	A	a	A	N/A	A
Ammonium Bifluoride	A	N/A	A2	N/A	A
Ammonium Carbonate	A2	a	A2	C	A
Ammonium Chloride	A2	a	A2	C	A
Ammonium Fluoride 25%	A	N/A	N/A	N/A	A
Ammonium Hydroxide	A	a	A	A	B
Ammonium Nitrate	A2	a	A2	C	A

Chemical	PVC	BPT Pharmed tube	Tygon	Silicone	Viton
Ammonium Oxalate	A	N/A	A	N/A	N/A
Ammonium Persulfate	A2	N/A	A2	D	A
Ammonium Phosphate, Dibasic	A2	A	A2	A	A
Ammonium Phosphate, Monobasic	A	A	A	A	A
Ammonium Phosphate, Tribasic	A	A	A	A	A
Ammonium Sulfate	A2	A	A2	A	A
Ammonium Sulfite	A2	N/A	A2	N/A	D
Amyl Acetate	D	B	D	D	D
Amyl Alcohol	A2	D	D	D	A
Amyl Chloride	D	C	D	D	B1
Aniline	C1-Fair	C	D	B	A
Aniline Hydrochloride	B2	C	D	D	A
Antifreeze (glycol–based)	B	N/A	B	B	A
Antimony Trichloride	A2	N/A	N/A	N/A	A2
Aqua Regia (80% HCl, 20% HNO3)	C1-Fair	D	D	D	B
Aromatic Hydrocarbons	D	D	N/A	D	A
Arsenic Acid	A1	N/A	B	A	A2
Arsenic Salts	A	A	A	N/A	A
Asphalt	A2	N/A	N/A	D	A
Barium Carbonate	A2	A	N/A	N/A	A
Barium Chloride	A1	A	B	A	A
Barium Cyanide	D	A	N/A	N/A	A
Barium Hydroxide	A2	A	N/A	A	A
Barium Nitrate	A	A	N/A	B	A
Barium Sulfate	B1	A	N/A	A	A
Barium Sulfide	A2	A	N/A	A	A
Beer	A2	N/A	A	A	A
Beet Sugar Liquids	A2	N/A	N/A	A	A
Benzaldehyde	D	D	D	D	D
Benzene	C1-Fair	N/A	D	D	A
Benzene Sulfonic Acid	A	D	D	D	A
Benzoic Acid	A	N/A	D	B	A
Bleach	A	N/A	B	N/A	A
Bleaching Liquors	A1	A	N/A	B	A
Borax (Sodium Borate)	A1	N/A	N/A	B	A
Boric Acid	A2	A	A	A	A
Bromine	C1-Fair	D	D	D	A
Butadiene	C1-Fair	N/A	A	D	B
Butane	C1-Fair	A	A	D	A
Butanol (Butyl Alcohol)	C1-Fair	D	D	B	A
Buttermilk	A1	N/A	B	A	A
Butyl Amine	D	N/A	D	B1	D
Butyl Ether	A2	N/A	A2	D	D
Butylacetate	D	B	D	D	D
Butylene	A1	N/A	N/A	D	A
Butyric Acid	B1	B	D	D	B1
Calcium Bisulfide	A2	A	N/A	C	A

Chemical	PVC	BPT Pharmed tube	Tygon	Silicone	Viton
Calcium Bisulfite	B	A	N/A	A	A
Calcium Carbonate	A2	A	N/A	A	A
Calcium Chlorate	B2	A	N/A	N/A	A
Calcium Chloride (30% in water)	C	A	A	A	A
Calcium Chloride (saturated)	A	A	N/A	A	A
Calcium Hydroxide	B	A	B2	A	A
Calcium Hydroxide (saturated)	A	A	N/A	A	A
Calcium Hypochlorite	B1	A	A	B	A
Calcium Hypochlorite (saturated)	A	A	N/A	N/A	A
Calcium Hypochlorite 30%	A	A	N/A	N/A	A
Calcium Nitrate	A2	A	A2	B1	A2
Calcium Oxide	B	A	C	A	B
Calcium Sulfate	B2	A	N/A	N/A	A
Calcium Sulfide	A	A	N/A	N/A	A
Cane Juice	A1	N/A	A	A	A
Carbolic Acid (Phenol)	D	N/A	B	D	A
Carbon Bisulfide	D	D	D	N/A	A
Carbon Dioxide (dry)	A2	A	A	B	B
Carbon Dioxide (wet)	A1	A	A	B	B
Carbon Disulfide	D	N/A	D	N/A	A1
Carbon Monoxide	A2	N/A	A	A2	A
Carbon Tetrachloride	D	D	D	D	A
Carbonated Water	A	N/A	N/A	N/A	A
Carbonic Acid	A2	N/A	A	A	A
Catsup	A	N/A	N/A	N/A	A
Cellulose Acetate	D	N/A	N/A	N/A	D
Chloral Hydrate	A	N/A	N/A	N/A	D
Chloric Acid	A2	N/A	N/A	N/A	N/A
Chlorine (dry)	D	C	A	D	A
Chlorine Water	A2	D	N/A	D	A
Chlorine, Anhydrous Liquid	D	D	B	D	A
Chloroacetic Acid	B1	B	A	D	D
Chlorobenzene (Mono)	D	D	D	D	A
Chlorobromomethane	D	B	N/A	D	A
Chloroform	D	C	D	D	A
Chlorosulfonic Acid	D	D	D	D	D
Chromic Acid 10%	A2	A	C	C	B
Chromic Acid 30%	A1	A	B	C	A
Chromic Acid 5%	A2	A	B	C	A
Chromic Acid 50%	D	A	B	C	A
Chromium Salts	A	A	A	N/A	N/A
Cider	A	N/A	N/A	B1	A
Citric Acid	B2	N/A	N/A	A	A
Copper Chloride	A1	A	A	A1	A
Copper Cyanide	A2	A	N/A	A	A
Copper Fluoborate	A	A	A	N/A	A
Copper Nitrate	A2	A	B	N/A	A

Chemical	PVC	BPT Pharmed tube	Tygon	Silicone	Viton
Copper Sulfate >5%	A2	A	N/A	A	A
Copper Sulfate 5%	A2	A	A	A	A
Creosote	A	N/A	N/A	D	A
Cresols	D	D	D	D	A
Cresylic Acid	D	N/A	N/A	D	A
Cupric Acid	A2	N/A	A2	A1	A2
Cyclohexane	D	D	D	D	A
Cyclohexanone	D	D	D	D	D
Detergents	A	N/A	A	A	A
Dextrin	A	N/A	N/A	N/A	D
Dextrose	A	N/A	N/A	A	A
Diacetone Alcohol	D	A	N/A	D	D
Dichlorobenzene	D	N/A	N/A	D	C
Dichloroethane	D	N/A	D	N/A	C
Diesel Fuel	A1	N/A	D	D	A
Diethyl Ether	D	N/A	N/A	D	D
Diethylamine	D	N/A	A	B	A
Diethylene Glycol	C1-Fair	N/A	C1-Fair	B1	A2
Dimethyl Aniline	D	N/A	D	D	D
Dimethyl Formamide	D	N/A	D	C	C
Diphenyl Oxide	D	N/A	D	C	A
Disodium Phosphate	A	N/A	N/A	N/A	A
Dyes	B	N/A	C	N/A	A
Epsom Salts (Magnesium Sulfate)	A1	N/A	B	A	A
Ethane	A1	N/A	A	D	A
Ethanol	C	C	C	B	A
Ethanolamine	D	N/A	N/A	B	D
Ether	D	C	D	D	C
Ethyl Acetate	D	B	D	B	D
Ethyl Benzoate	D	N/A	D	D	A1
Ethyl Chloride	D	C	D	D	A
Ethyl Ether	D	N/A	D	D	D
Ethylene Bromide	D	N/A	D	D	A
Ethylene Chloride	D	N/A	N/A	D	B
Ethylene Chlorohydrin	D	A	D	C	A
Ethylene Diamine	D	N/A	N/A	A	B
Ethylene Dichloride	D	C	D	D	A
Ethylene Glycol	A	A	A	A	A
Ethylene Oxide	D	A	A	D	D
Fatty Acids	A	C	D	C	A
Ferric Chloride	A	A	N/A	B	A
Ferric Nitrate	A	A	N/A	C	A
Ferric Sulfate	A	A	N/A	B	A
Ferrous Chloride	A	A	N/A	N/A	A
Ferrous Sulfate	A	A	N/A	N/A	B
Fluoboric Acid	A	D	N/A	N/A	B
Fluorine	D	N/A	D	D	C

Chemical	PVC	BPT Pharmed tube	Tygon	Silicone	Viton
Fluosilicic Acid	D	C	A	N/A	B1
Formaldehyde 100%	A	D	D	B	D
Formaldehyde 40%	A	D	D	N/A	A
Formic Acid	A1	A	A	B	C
Freon® 11	A2	D	A	D	B
Freon® 113	B	D	N/A	D	B
Freon® 12	A2	D	A	D	B
Freon® 22	A	D	A	D	D
Freon® TF	B	D	N/A	D	B
Fruit Juice	A	N/A	A	N/A	A
Fuel Oils	A2	N/A	D	D	A
Furan Resin	A	N/A	A	D	D
Furfural	D	N/A	D	D	D
Gallic Acid	B	N/A	D	D	A
Gasoline (high–aromatic)	A	D	N/A	D	A
Gasoline, leaded, ref.	B	D	D	D	A1
Gasoline, unleaded	C2-Fair	D	D	D	A1
Gelatin	B	N/A	A	A	A
Glucose	A2	A	A	A	A
Glue, P.V.A.	C	A	C	A	B
Glycerin	A	A	A	A	A
Glycolic Acid	B	N/A	A	A	A
Grape Juice	A	N/A	B	A	A
Grease	A	N/A	A	D	A
Heptane	C1-Fair	N/A	D	D	A
Hexane	B1	N/A	D	D	A
Honey	A	N/A	A	A	A
Hydraulic Oil (Petro)	A	N/A	A	B	A
Hydraulic Oil (Synthetic)	A	N/A	A	B	A
Hydrobromic Acid 100%	A1	D	A	D	A
Hydrobromic Acid 20%	B2	D	A	D	A
Hydrochloric Acid 100%	D	A	A1	D	A
Hydrochloric Acid 20%	A2	A	A1	D	A
Hydrochloric Acid 37%	B	B	A1	B	A
Hydrochloric Acid, Dry Gas	A2	A	N/A	N/A	N/A
Hydrocyanic Acid	B	N/A	A	C	A
Hydrocyanic Acid (Gas 10%)	A	N/A	A	D	A
Hydrofluoric Acid 100%	C	N/A	D	D	B
Hydrofluoric Acid 20%	B	N/A	A	D	A
Hydrofluoric Acid 50%	B1	D	C	D	B
Hydrofluoric Acid 75%	C	N/A	C	D	B
Hydrofluosilicic Acid 100%	B1	N/A	D	D	A
Hydrofluosilicic Acid 20%	A2	N/A	A	D	A
Hydrogen Gas	A2	N/A	A	C	A
Hydrogen Peroxide 10%	A1	A	B	A	A
Hydrogen Peroxide 100%	A	B	B	B	A
Hydrogen Peroxide 30%	A1	A	B	B	A

Chemical	PVC	BPT Pharmed tube	Tygon	Silicone	Viton
Hydrogen Peroxide 50%	A1	A	B	B	A
Hydrogen Sulfide (aqua)	B1	N/A	A	C	D
Hydrogen Sulfide (dry)	A2	N/A	A	C	D
Hydroquinone	B	N/A	N/A	N/A	B
Hydroxyacetic Acid 70%	D	N/A	N/A	N/A	A
Ink	C	N/A	C	N/A	A
Iodine	A	A	A	N/A	A
Iodine (in alcohol)	A	A	N/A	N/A	N/A
Iodoform	A	N/A	C	N/A	N/A
Isooctane	A1	N/A	D	D	A1
Isopropyl Acetate	D	N/A	D	D	D
Isopropyl Ether	B	N/A	D	D	D
Isotane	A	N/A	N/A	N/A	A
Jet Fuel (JP3, JP4, JP5, JP8)	C	N/A	D	D	A
Kerosene	A2	D	D	D	A
Ketones	D	D	D	N/A	D
Lacquer Thinners	D	B	D	D	D
Lacquers	D	N/A	A	D	D
Lactic Acid	B1	A	A	A	A
Lard	A1	N/A	D	B	A
Lead Acetate	B	A	B	A	D
Lead Nitrate	A2	N/A	A2	B1	A2
Lead Sulfamate	B	N/A	N/A	B	A
Lime	B	N/A	A	N/A	A
Linoleic Acid	A2	N/A	A2	B1	B1
Lithium Chloride	D	N/A	A2	A1	A1
Lubricants	B2	N/A	B	D	A
Lye: Ca(OH)2 Calcium Hydroxide	B2	N/A	B2	A	B1
Lye: KOH Potassium Hydroxide	B	N/A	B	C	B
Lye: NaOH Sodium Hydroxide	A	N/A	B	A1	B1
Magnesium Bisulfate	A2	N/A	A2	N/A	N/A
Magnesium Carbonate	B	N/A	N/A	N/A	A
Magnesium Chloride	B	A	N/A	A	A2
Magnesium Hydroxide	A2	N/A	A	A	A
Magnesium Nitrate	A2	N/A	A	N/A	A
Magnesium Sulfate (Epsom Salts)	A1	A	A	A	A
Maleic Acid	A2	N/A	D	N/A	A
Malic Acid	A2	A	A	B	A
Manganese Sulfate	C	A	A1	A1	A2
Mayonnaise	D	N/A	D	N/A	A
Melamine	D	N/A	D	C	A
Mercuric Chloride (dilute)	A	A	D	N/A	A
Mercuric Cyanide	A	A	N/A	A	A1
Mercurous Nitrate	A	A	A2	N/A	A1
Mercury	A	A	A	N/A	A
Methane	B	A	A	D	A
Methanol (Methyl Alcohol)	A1	A	D	A	C

Chemical	PVC	BPT Pharmed tube	Tygon	Silicone	Viton
Methyl Acetate	D	N/A	D	D	D
Methyl Acetone	D	N/A	A	N/A	D
Methyl Alcohol 10%	A1	N/A	A1	A	C
Methyl Bromide	D	N/A	D	N/A	A
Methyl Butyl Ketone	A	N/A	N/A	D	D
Methyl Cellosolve	D	N/A	C	D	D
Methyl Chloride	D	C	D	D	A1
Methyl Dichloride	A	N/A	N/A	N/A	A1
Methyl Ethyl Ketone	D	D	D	D	D
Methyl Isobutyl Ketone	D	N/A	D	D	D
Methyl Isopropyl Ketone	D	N/A	N/A	C	D
Methyl Methacrylate	A	N/A	N/A	C	D
Methylamine	D	N/A	D	N/A	D
Methylene Chloride	D	N/A	D	N/A	B
Milk	A2	N/A	A	A	A
Mineral Spirits	A	N/A	D	D	A
Molasses	A	N/A	A	N/A	A
Monoethanolamine	D	N/A	D	B	D
Motor Oil	B	N/A	D	N/A	N/A
Mustard	B	N/A	B	N/A	D
Naphtha	A1	D	D	D	A
Naphthalene	D	N/A	D	D	A
Natural Gas	A	N/A	A	A	A
Nickel Chloride	A	A	B	A	A
Nickel Nitrate	A	A	A2	N/A	A2
Nickel Sulfate	A	A	A	A	A
Nitrating Acid (<1% Acid)	D	N/A	D	N/A	N/A
Nitrating Acid (<15% H2SO4)	D	N/A	D	N/A	N/A
Nitrating Acid (<15% HNO3)	D	N/A	D	N/A	N/A
Nitrating Acid (>15% H2SO4)	D	N/A	D	N/A	N/A
Nitric Acid (20%)	A1	A	D	D	A
Nitric Acid (5 to10%)	A1	A	D	C	A
Nitric Acid (50%)	B1	A	D	D	A
Nitric Acid (Concentrated)	B1	D	D	D	A
Nitrobenzene	D	D	D	D	B
Nitromethane	B2	N/A	D	D	D
Nitrous Acid	A	A	A	N/A	B
Nitrous Oxide	A	N/A	A	N/A	B
Oils: Aniline	D	C	D	D	C
Oils: Castor	A	N/A	A	A	A
Oils: Cinnamon	D	N/A	N/A	N/A	A
Oils: Citric	B	N/A	D	N/A	A
Oils: Coconut	A1	N/A	A	A	A
Oils: Cod Liver	A1	N/A	N/A	B	A
Oils: Corn	B	N/A	B	A	B
Oils: Cottonseed	B2	N/A	B	A	A
Oils: Creosote	C	N/A	N/A	D	A

Chemical	PVC	BPT Pharmed tube	Tygon	Silicone	Viton
Oils: Crude Oil	A	N/A	N/A	N/A	A
Oils: Diesel Fuel (20, 30, 40, 50)	B	N/A	A	D	A
Oils: Fuel (1, 2, 3, 5A, 5B, 6)	A2	N/A	A	C	B
Oils: Hydraulic Oil (Petro)	A	N/A	A	B	A
Oils: Hydraulic Oil (Synthetic)	A	N/A	A	B	A
Oils: Linseed	A2	C	A	A	A
Oils: Mineral	B	D	B	C	A
Oils: Olive	C	C	B	D	A
Oils: Orange	C1-Fair	C	N/A	D	A
Oils: Palm	A	C	N/A	N/A	A
Oils: Peanut	A1	C	A	A	A
Oils: Pine	D	C	D	D	A
Oils: Rosin	C1-Fair	C	N/A	N/A	A
Oils: Sesame Seed	A	C	A	N/A	A
Oils: Silicone	A	C	A	C	A
Oils: Soybean	A1	N/A	B	A	A
Oils: Transformer	B	N/A	N/A	B	A
Oils: Turbine	A1	N/A	A	D	A
Oleic Acid	C2-Fair	C	D	D	B
Oleum 100%	D	N/A	C	D	A
Oleum 25%	D	N/A	A	D	A
Oxalic Acid (cold)	B	B	B	B	A
Ozone	B	B	A	A	A
Palmitic Acid	B1	C	D	D	A1
Paraffin	B	N/A	D	N/A	B
Pentane	A	N/A	A	D	A
Perchloric Acid	C	A	N/A	D	A
Perchloroethylene	C1-Fair	C	D	D	A
Petrolatum	B	N/A	B	D	A
Phenol (10%)	C1-Fair	A	B	D	A
Phenol (Carbolic Acid)	D	A	B	D	A
Phosphoric Acid (<40%)	B	A	A	C	A
Phosphoric Acid (>40%)	B	A	A	D	A
Phosphoric Acid (crude)	B2	N/A	D	D	A
Phosphoric Acid (molten)	D	N/A	D	N/A	N/A
Phosphorus	A1	N/A	B1	N/A	N/A
Phosphorus Trichloride	D	N/A	A	N/A	A1
Photographic Developer	A	N/A	A	B	A
Photographic Solutions	A	N/A	A2	A	B1
Phthalic Anhydride	D	N/A	D	N/A	A
Picric Acid	D	A	A	D	A
Plating Solutions: Antimony Plating 130°F	A	A	N/A	N/A	A
Plating Solutions: Arsenic Plating 110°F	A	A	N/A	N/A	A
Plating Solutions: Brass: High-Speed Brass Bath 110°F	A	A	N/A	N/A	A
Plating Solutions: Brass: Regular Brass Bath 100°F	A	A	N/A	N/A	A
Plating Solutions: Bronze: Cu-Cd Bronze Bath R.T.	A	A	N/A	N/A	A
Plating Solutions: Bronze: Cu-Sn Bronze Bath 160°F	D	A	N/A	N/A	A

Chemical	PVC	BPT Pharmed tube	Tygon	Silicone	Viton
Plating Solutions: Bronze: Cu-Zn Bronze Bath 100°F	A	A	N/A	N/A	A
Plating Solutions: Cadmium: Cyanide Bath 90°F	A	A	N/A	N/A	A
Plating Solutions: Cadmium: Fluoborate Bath 100°F	A	A	N/A	N/A	A
Plating Solutions: Chromium: Barrel Chrome Bath 95°F	A	A	N/A	N/A	C
Plating Solutions: Chromium: Black Chrome Bath 115°F	A	A	N/A	N/A	C
Plating Solutions: Chromium: Chromic-Sulfuric Bath 130°F	A	A	N/A	N/A	C
Plating Solutions: Chromium: Fluoride Bath 130°F	A	A	N/A	N/A	C
Plating Solutions: Chromium: Fluosilicate Bath 95°F	A	A	N/A	N/A	C
Plating Solutions: Copper (Acid): Copper Fluoborate Bath 120°F	A	A	N/A	N/A	A
Plating Solutions: Copper (Acid): Copper Sulfate Bath R.T.	A	A	N/A	N/A	A
Plating Solutions: Copper (Cyanide): Copper Strike Bath 120°F	A	A	N/A	N/A	A
Plating Solutions: Copper (Cyanide): High-Speed Bath 180°F	D	A	N/A	N/A	A
Plating Solutions: Copper (Cyanide): Rochelle Salt Bath 150°F	D	A	N/A	N/A	A
Plating Solutions: Copper (Misc): Copper (Electroless)	A	A	D	N/A	A
Plating Solutions: Copper (Misc): Copper Pyrophosphate	A	A	N/A	N/A	A
Plating Solutions: Gold: Acid 75°F	A	A	N/A	N/A	A
Plating Solutions: Gold: Cyanide 150°F	D	A	N/A	N/A	A
Plating Solutions: Gold: Indium Sulfamate Plating R.T.	A	A	N/A	N/A	A
Plating Solutions: Gold: Neutral 75°F	A	A	N/A	N/A	A
Plating Solutions: Iron: Ferrous Am Sulfate Bath 150°F	D	A	N/A	N/A	A
Plating Solutions: Iron: Ferrous Chloride Bath 190°F	D	A	N/A	N/A	A
Plating Solutions: Iron: Ferrous Sulfate Bath 150°F	D	A	N/A	N/A	A
Plating Solutions: Iron: Fluoborate Bath 145°F	D	A	N/A	N/A	A
Plating Solutions: Iron: Sulfamate 140°F	A	A	N/A	N/A	A
Plating Solutions: Iron: Sulfate-Chloride Bath 160°F	D	A	N/A	N/A	A
Plating Solutions: Lead Fluoborate Plating	A	A	N/A	N/A	A
Plating Solutions: Nickel: Electroless 200°F	D	A	N/A	N/A	A
Plating Solutions: Nickel: Fluoborate 100-170°F	A	A	N/A	N/A	A
Plating Solutions: Nickel: High-Chloride 130-160°F	D	A	N/A	N/A	A
Plating Solutions: Nickel: Sulfamate 100-140°F	A	A	N/A	N/A	A
Plating Solutions: Nickel: Watts Type 115-160°F	D	A	N/A	N/A	A
Plating Solutions: Rhodium Plating 120°F	A	A	N/A	N/A	A
Plating Solutions: Silver Plating 80-120°F	A	A	N/A	N/A	A
Plating Solutions: Tin-Fluoborate Plating 100°F	A	A	N/A	N/A	A
Plating Solutions: Tin-Lead Plating 100°F	A	A	N/A	N/A	A
Plating Solutions: Zinc: Acid Chloride 140°F	A	A	N/A	N/A	A
Plating Solutions: Zinc: Acid Fluoborate Bath R.T.	A	A	N/A	N/A	A
Plating Solutions: Zinc: Acid Sulfate Bath 150°F	D	A	N/A	N/A	A
Plating Solutions: Zinc: Alkaline Cyanide Bath R.T.	A	A	N/A	N/A	A
Potash (Potassium Carbonate)	A	A	A	N/A	A
Potassium Bicarbonate	A	A	A	A1	A
Potassium Bromide	A	N/A	B	A1	A
Potassium Chlorate	A	N/A	B	B	A
Potassium Chloride	A	N/A	A	A	A
Potassium Chromate	A	N/A	B	N/A	A
Potassium Cyanide Solutions	A	N/A	A	A	A
Potassium Dichromate	A	N/A	N/A	A	A

Chemical	PVC	BPT Pharmed tube	Tygon	Silicone	Viton
Potassium Ferricyanide	A	N/A	B	N/A	A
Potassium Ferrocyanide	A	N/A	B	N/A	A
Potassium Hydroxide (Caustic Potash)	A1	A	B	C	B
Potassium Hypochlorite	B1	N/A	B1	N/A	N/A
Potassium Iodide	A2	A	B	N/A	A
Potassium Nitrate	A	N/A	A	A	A
Potassium Permanganate	A1	N/A	B	N/A	A
Potassium Sulfate	A2	N/A	A	A	A2
Potassium Sulfide	A2	N/A	N/A	A	A
Propane (liquefied)	A1	N/A	N/A	D	A
Propylene	B1	N/A	A	D	A1
Propylene Glycol	C1-Fair	N/A	A	A	A
Pyridine	D	C	D	D	D
Pyrogallic Acid	A	N/A	N/A	N/A	A
Resorcinal	C	N/A	C	N/A	A1
Rosins	C1-Fair	N/A	N/A	A	A
Rum	A	N/A	N/A	A	A
Salicylic Acid	B1	N/A	B1	N/A	A1
Salt Brine (NaCl saturated)	A	N/A	N/A	A1	A2
Sea Water	A2	N/A	N/A	A1	A
Silicone	A	A	N/A	C	A
Silver Nitrate	A1	A	B	A	A
Soap Solutions	A	B	A	A	A
Soda Ash (see Sodium Carbonate)	A	A	N/A	A	A
Sodium Acetate	B1	N/A	A	D	D
Sodium Benzoate	B1	N/A	B1	N/A	A1
Sodium Bicarbonate	A2	N/A	B	A	A
Sodium Bisulfate	A2	A	B	A	A
Sodium Bisulfite	A2	A	B	A	A
Sodium Borate (Borax)	A2	N/A	N/A	A	A
Sodium Bromide	B2	N/A	B2	N/A	A1
Sodium Carbonate	A2	A	B	A	A
Sodium Chlorate	A1	B	B	C	A
Sodium Chloride	A2	N/A	B	A	A
Sodium Cyanide	A2	N/A	A	A	A2
Sodium Ferrocyanide	A	A	A	N/A	A
Sodium Fluoride	A2	N/A	D	N/A	A
Sodium Hydrosulfite	C	B	A	C	A
Sodium Hydroxide (20%)	A	A	A1	A2	C
Sodium Hydroxide (50%)	A	N/A	C	A1	D
Sodium Hydroxide (80%)	A	N/A	C	A1	D
Sodium Hypochlorite (<20%)	A	N/A	C	B	A1
Sodium Hypochlorite (100%)	B	N/A	N/A	B	A1
Sodium Iodide	A	N/A	N/A	N/A	C
Sodium Metaphosphate	A	N/A	N/A	A	A
Sodium Metasilicate	A	N/A	N/A	N/A	A
Sodium Nitrate	A2	A	B	D	A

Chemical	PVC	BPT Pharmed tube	Tygon	Silicone	Viton
Sodium Perborate	A2	N/A	N/A	B	A
Sodium Peroxide	B2	N/A	N/A	D	A
Sodium Polyphosphate	A1	N/A	N/A	D	A
Sodium Silicate	A2	A	B	A	A
Sodium Sulfate	A2	A	A	A	A
Sodium Sulfide	A2	A	B	A	A2
Sodium Sulfite	A2	A	A	A	A2
Sodium Tetraborate	A2	N/A	N/A	A	A
Sodium Thiosulfate (hypo)	A2	N/A	N/A	A	A
Stannic Chloride	A2	N/A	N/A	B	A
Stannous Chloride	A1	N/A	A	B	A
Starch	A	N/A	N/A	N/A	A
Stearic Acid	B2	C	D	B	A1
Stoddard Solvent	C1-Fair	N/A	C	D	A
Styrene	D	D	N/A	D	B
Sulfate (Liquors)	B	N/A	N/A	B	A1
Sulfur Chloride	C1-Fair	N/A	D	C	A
Sulfur Dioxide	A1	N/A	A	B	A
Sulfur Dioxide (dry)	A2	N/A	A	B	A
Sulfur Hexafluoride	B	N/A	N/A	B	N/A
Sulfur Trioxide	A	N/A	A	B	A
Sulfur Trioxide (dry)	A1	N/A	B	B	A
Sulfuric Acid (<10%)	A1	A	A	C	A
Sulfuric Acid (10-75%)	A1	A	C	D	A2
Sulfuric Acid (75-100%)	D	D	D	D	A1
Sulfuric Acid (cold concentrated)	D	D	D	D	B
Sulfuric Acid (hot concentrated)	D	D	D	D	A2
Sulfurous Acid	A2	A	B	D	A
Tannic Acid	A1	B	B	B	A
Tanning Liquors	A1	A	B	B	A
Tartaric Acid	A1	A	B	A	A
Tetrachloroethane	C	N/A	N/A	D	A
Tetrachloroethylene	D	N/A	N/A	D	A
Tetrahydrofuran	D	N/A	N/A	D	D
Tin Salts	A	A	A	B	A
Toluene (Toluol)	D	D	D	D	A
Tomato Juice	A	N/A	N/A	N/A	A
Trichloroacetic Acid	B	B	A	D	C
Trichloroethane	C	N/A	D	D	A
Trichloroethylene	D	D	D	D	A
Tricresylphosphate	D	N/A	D	C	A2
Triethylamine	B	N/A	A	N/A	D
Trisodium Phosphate	A	N/A	A	A	A
Turpentine	D	D	D	D	A
Urea	D	A	B	B	A
Uric Acid	A	A	A	N/A	N/A
Urine	A	N/A	N/A	N/A	A1

Chemical	PVC	BPT Pharmed tube	Tygon	Silicone	Viton
Varnish	D	N/A	D	D	A
Vinegar	B	N/A	A1	A	A
Vinyl Acetate	D	N/A	D	D	A1
Vinyl Chloride	D	N/A	D	N/A	A1
Water, Acid, Mine	B	N/A	N/A	B	A
Water, Deionized	A2	A	A2	N/A	A1
Water, Distilled	A2	A	B	C	A
Water, Fresh	B	A	B	B	A
Water, Salt	B	A	B	B	A
Whiskey and Wines	A2	N/A	C	A	A
White Liquor (Pulp Mill)	A2	N/A	N/A	A	A
White Water (Paper Mill)	A	N/A	N/A	N/A	A
Xylene	D	D	D	D	B
Zinc Chloride	B	D	A	B	A
Zinc Sulfate	A2	N/A	A	A	A

Explanation of Footnotes

1. Satisfactory to 72°F (22°C)
2. Satisfactory to 120°F (48°C)

Ratings - Chemical Effect

A = Excellent.

B = Good -- Minor Effect, slight corrosion or discoloration.

C = Fair -- Moderate Effect, not recommended for continuous use. Softening, loss of strength, swelling may occur.

D = Severe Effect, not recommended for ANY use.

N/A = Information not available.

ANNEX C | OPERATOR QUALIFICATION LIST

Supervisor list (allowed to perform lamp replacement and such).

Date	Name	Signature	Instructed by	Signature

Operator list.

Date	Name	Signature	Instructed by	Signature

ANNEX D | MAINTENANCE LIST

Date	Action	Name	Signature
	Installed at test location.		
	First run performed.		

TQC B.V.
Molenbaan 19
2908 LL, Capelle aan den Ijssel
The Netherlands

+31 (0) 10 – 7900 100
+31 (0) 10 – 7900 129info.
info@tqcsheen.com
www.tqcsheen.com

TQC GmbH
Nikolaus-Otto-Strasse 2
Hilden, D-40721
Germany

+49 (0)2103-25326-0
+49 (0)2103-25326-29
info.de@tqc.eu
www.tqcsheen.com

TQC ITALIA s.r.l.
Via Cesare Cantu',26
SEREGNO, (MB) 20831
Italy

+39 0362-1822230
+39 0362-1822234
info@tqcitaly.it
www.tqcsheen.com

TQC Korea
Bldg Star Plaza, #805
Kimpo-Hangang-8-Ro 410
10071 Kimpo-Si, Gyeonggi-Do
South-Korea

+82 (0) 31 982 7074
+82 (0) 31 997 0827
jongsun@tqc.kr
www.tqcsheen.com

TQC-Singapore
3689 Hadley Road
Tang TH | 陳德雄
Sales & Service Manager APAC

+65 8181 8607
+31 (0)10 7900129
teckhiong.tang@tqc.eu
www.tqcsheen.com

TQC-USA Inc.
3689 Hadley Road
Metamora, MI 48455
USA

+1 810 797 8300
+1 810 797 8303
joel@tqc-usa.com
www.tqc-usa.com

TQC Norge AS
Øvre Langgt. 26
Tønsberg, 3110
Norway

+47 333 10220
-
info@tqc.no
www.tqcsheen.com

TQC UK
Po Box 977A
Surbiton, KT1 9XL
England

+44 208 255 0143
-
janet@tqc.eu
www.tqcsheen.com