CPM-80 Multifunction Power Analyzer

ADTEK

Description

CPM-80 multifunction power analyzer provide high accuracy single phase and three-phase energy measuring and displaying, energy accumulating, power quality analysis, data logging and data communication.
CPM-80 series meters are able to measure bidirectional, four quadrants kWh and kVarh.
It provides maximum/minimum records for power usage and power demand parameters.
Hardware standard built in a RS485 Modbus communication port , 4 Digital inputs, 2 Relay outputs, LCM and 4MB flash for data-logging.
In addition , also provide TOU , voltage and current THD, harmonics up to the 63rd and auto wiring change via software .

Applications

- Energy management system
- Factory automation
- Intelligent power panel
- Industrial automation
- Power Grid automation
- Community power monitoring
- Intelligent green building

Ordering Information

CPM — Model — A Input Range | V Input Range — Option1 — Option2 — Option3 — AUX.Power

CODE	Function
81	The Model functions refer to the Meter selection guide
82	
83	
85	
87	

CODE		Input Range
A1		0~1A
A5		0~5A
	V6	40~400V_{LN} 60~600V_{LL}

CODE	I/O Type
D4	4xDI
	4xRO
D8	8xDI

CODE	Analog Output
N	NONE
A2	2xAO

CODE	Comm. Output
N	NONE
R	RS485 Modbus
E	Ethernet
B	BACnet
P	ProfiBus
W	WiFi

CODE	Power Supply
ADH	AC 85~264V DC 100~300V
ADL	AC/DC 20~56V

Meter Selection Guide

Features		81	82	83	85	87
Voltage	V_{12} V_{23} V_{31} V_{LL_Avg} / V_1 V_2 V_3 V_{LN_Avg}	●	●	●	●	●
Current	I_1 I_2 I_3 I_{Avg} I_N	●	●	●	●	●
Active Power	Four quadrants P_1 P_2 P_3 ΣP	●	●	●	●	●
Reactive Power	Four quadrants Q_1 Q_2 Q_3 ΣQ	●	●	●	●	●
Apparent Power	S_1 S_2 S_3 ΣS	●	●	●	●	●
Power Factor	PF_1 PF_2 PF_3 PF_{Avg}	●	●	●	●	●
Frequency	Hz	●	●	●	●	●
Active Energy	Wh_Imp Wh_Exp Wh_Total Wh_Net	●	●	●	●	●
Reactive Energy	Varh_Imp Varh_Exp Varh_Total Varh_Net	●	●	●	●	●
Apparent Energy	VAh	●	●	●	●	●
THD/Voltage	THD_{V12} THD_{V23} THD_{V31} THD_{V_Avg}	●	●	●	●	●
THD/Current	THD_{I1} THD_{I2} THD_{I3} THD_{I_Avg}	●	●	●	●	●
Individual harmonic	2nd~63rd Individual harmonics		●	●	●	●
Phasor diagram	Voltage phasor diagram , Current phasor diagram		●	●	●	●
Waveform capture	Voltage waveform , Current waveform				●	●
Demand	Current Demand, Power Demand		●	●	●	●
Max. Demand Value	Max. Demand of Current & Power and time stamp		●	●	●	●
Max/Min Values	Maximum / Minimum values and time stamp	●	●	●	●	●
Power record	Swells voltage、Falling voltage include time and setting					●
Event record	FREQ, V1, V2, V3, V_AVG, U12, U23, U31, U_AVG, I1, I2, I3, I_AVG, IN, P1, P2, P3, P_SUM, Q1, Q2, Q3, Q_SUM, S1, S2, S3, S_SUM, PF1, PF2, PF3, PF_AVG, Unbl_V, Unbl_I, LCR, THD_V1, THD_V2, THD_V3, THD_V, THD_I1, THD_I2, THD_I3, THD_I, DM_P, DM_Q, DM_S, DM_I1, DM_I2, DM_I3		●	●	●	●
Data record	FREQ, V1, V2, V3, V_AVG, U12, U23, U31, U_AVG, I1, I2, I3, I_AVG, IN, P1, P2, P3, P_SUM, Q1, Q2, Q3, Q_SUM, S1, S2, S3, S_SUM, PF1, PF2, PF3, PF_AVG, Unbl_V, Unbl_I,Phasor Diagram_V, Phasor Diagram_I, THD_V.MAX, THD_V.MIN, V_AVG.THD.MAX, V_AVG.THD.MIN, THD_I.MAX, THD_I.MIN, I_AVG.THD.MAX, I_AVG.THD.MIN, DM_P, DM_Q, DM_S, DM_I.MAX, DM_I.MIN		●	●	●	●
External Control Input	ECI1 ECI2 ECI3 ECI4	●	●	●	●	●
	ECI5 ECI6 ECI7 ECI8	◎	◎	◎	◎	◎
Digital Output	PO1 PO2	●	●	●	●	●
Relay Output	RO1 RO2 RO3 RO4	◎	◎	◎	◎	◎
Analog Output	AO1 AO2	◎	◎	◎	◎	◎
Time of Use	4 seasons, 8 tariff settings per day, Per year or up to 5 years setting			●	●	●
Date	Year, Month, Day, Hour, Minute, Second	●	●	●	●	●

◎ Optional features

Accuracy & Resolutions

PARAMETER	ACCURACY	RESOLUTION	MEASUREMENT RANGE
Voltage	0.1%	0.1V	40.0~400.0Vac(VLN)
Current	0.1%	0.001A	1%~120% CT rating current
Neutral Current	0.5%	0.001A	1%~120% CT rating current
Active Power	0.25%	1W	-999999999~999999999W
Reactive Power	0.25%	1Var	-999999999~999999999Var
Apparent Power	0.25%	1VA	0~999999999VA
Power Factor	0.25%	0.001	-0.020~+1.000~0.020
Frequency	0.2%	0.01Hz	45.00~65.00Hz
Active Energy	0.5%	0.1kWh	0~99999999.9kWh
Reactive Energy	0.5%	0.1kVarh	0~99999999.9kVarh
Apparent Energy	0.5%	0.1kVAh	0~99999999.9kVAh
THD	1.0%	0.1%	0~100.0%
Individual harmonic	1.0%	0.1%	0~100.0%
Unbalance	0.5%	0.1%	0~300.0%

Technical Specification

Electrical Characteristics

Measurement: True RMS
Sampling: 256 point/Cycle
Metering system type: 1P2W, 1P3W, 3P3W, (1、2、3CT)、3P4W (1、3CT)；Balance/Unbalance

Input range: Voltage:40~400V_{LN}；60~600V_{LL}
PT Primary side ratio:100~1200000V
PT Secondary side ratio:50~600V
Current:0~5A, (Optional:0~1A)
CT Primary side ratio: 5~9999A

Metering over range: Voltage:2x rated voltage continuous；2500V,1sec
Current:2x rated current continuous；20x rated current 1sec

Input load: Voltage:<0.2VA；Current:<0.1VA

Power Quality

THD: Total harmonic distortion for voltage and current
Individual harmonic: 2nd~63rd individual harmonics for voltage and current

Relay Output(RO)

Relay contact form: 4 sets SPST(1a)；5A/250Vac；5A/30Vdc；
Relay action mode: Hi / Lo/Hi.Hold / Lo.Hold /DO
Set points: Up to 48 parameters of power and Demand for assign

Analog Output(AO)

Output channel: 2 channels
Signal output: Voltage:0~5V /1~5V / 0~10V
Current: 0~20mA / 4~20mA / 0~10mA
Output capacity: Voltage: ≧1000Ω；Current:≤ 530Ω
Accuracy: ≤± 0.1% of F.S.; 16 bits DA converter
Ripple rate: ≤± 0.1% of F.S.
Response time: ≤100mS.(input: 10~90%)

External Control Input (ECI)

Input mode: 4 channels or 8 channels ECI input；mechanical contact open collector input are available
Input function: Can set up for DI /Demand reset / Max. Demand reset / Energy values reset / Max. and Min. values reset / Relay reset
Debouncing time: 0~99 (x8mS) programable

Pulse Output (PO)

Output mode: 2 channels open collect(O.C.);
Output: 30Vdc, 30mA(max)
Output frequency: 40Hz (max)
Pulse divider: 1~9999 (1 Pulse= 0.1kWh; if set 100, 1Pulse= 10.0kWh)
Pulse width: 0~5000mS,0 is duty cycle 50%

TOU (CPM-83、85、87 only)

4 Seasons: 1~4 seasons per year
8 Tariff setting: 1~8 each day(For peak, mid peak, off peak per day for billing)
Parameters of TOU : RE-Exp、RE-Tota、SE-Total
Yearly setting: Tariff setting for 1 year or set up to 5 years

Data Record

Waveform capture: Each phase of voltage and current sampling are 64 points per cycle and continues record 16 cycles
Data logging: Load setting from previous saved file or set according to needs.Time interval from 1~32767 for second, minute, hour or day, depend on value record needs.
Event record: Recording abnormal event and timestamp
Memory storage: 4MB Flash ROM

RS485 communication (Second RS485 is optional)

Output set: 2 ports
Protocol: Modbus RTU mode
Baud rate: 1200/2400/4800/9600/19200/38400 bps
Data bits: 8 bits
Parity: None / Even / Odd
Stop bit: 1 or 2
Address: 1~247
Distance: 1200M max
Terminate resistor: 120~300Ω/0.25W(typical: 150Ω)

Ethernet (Optional)

Network interface: 10M / 100M BASE-T
Protocol: Modbus TCP

WiFi (Optional)

Standard: EEE 802.11 b/g/n Standard
Protocol: Modbus TCP

BACnet (Optional)

Protocol: BACnet Protocol

Environmental Characteristics

Operating Temp.: 0~60℃
Humidity rating: 5~95%RH, Non-condensing
Temp. coefficient: ≤100 PPM/℃
Storage Temp.: -10~70℃
IP Enclosure: Front panel: IEC 529 (IP50)；Housing: IP20

Power Supply

Range: ADH:AC 85~264V / DC 100~300V
ADL : AC/DC 20~56V
Power consumption: AC:≤15VA @ 230V / DC:≤5W

Mechanical Characteristics

Dimensions: 96mm(W)x96mm(H)x101mm(L)
Panel cutout: 90mm(W)X90mm(H)
Material: ABS, Black (with fire-retardant)
Mounting: Panel mounting
Wire terminal: PA 66 (UL 94V-0)
Voltage input:
AWG:28~12 / 0.2~2.5mm^2
Screw Torque Value:M2.5 / 5.202kgf.cm(Max)
Current input:
AWG:22~12 / 0.5~3.0mm^2
Screw Torque Value:M4 / 12.24kgf.cm(Max)
Other input:
AWG:28~16 / 0.5~1.5mm^2
Screw Torque Value:M2 / 2.04kgf.cm(Max)
Weight: ≤600g

Safety

Isolation: AC 2KV,50/60Hz,for 1 min, Between Power / Input / Output / Case
Insulation resistance: ≧100MΩ @ 500V_{dc}
EMC: EN61326:2013;EN61000-3-2-2014; EN6100-3-3:2013
LVD: EN61010-1:2010

Front panel

Display: 3.5" TFT LCD
Update rate: 0.5 Sec
Operation key: The keys function as icons show on display

Dimensions

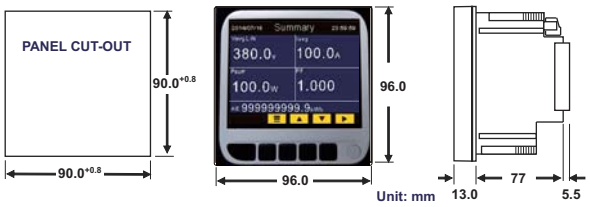

Installation

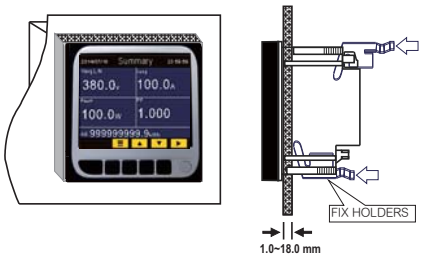

Connection diagram

4DI+4RO

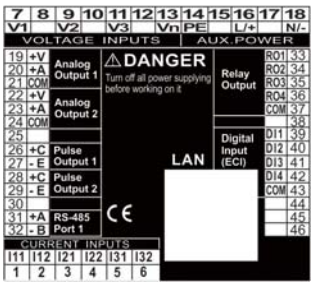

8DI

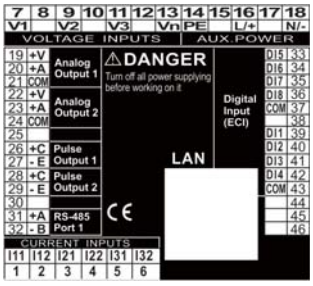

Power connection

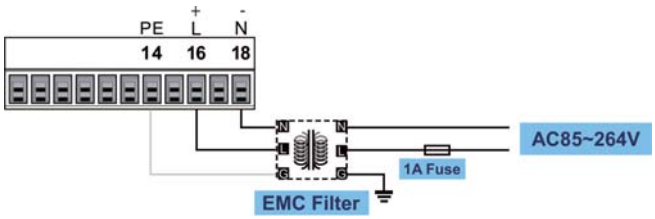

Voltage and Current connection

1P2W

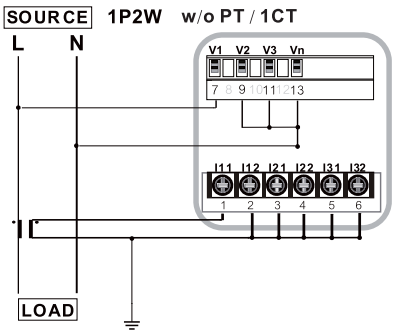

1P3W

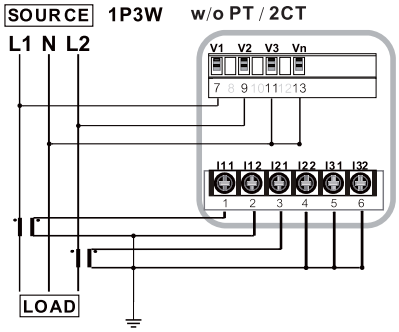

3P3W

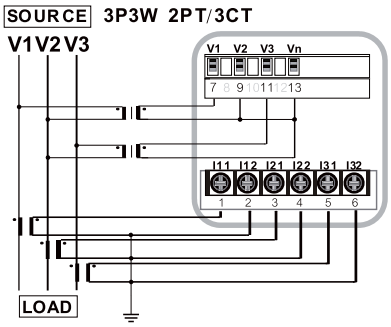

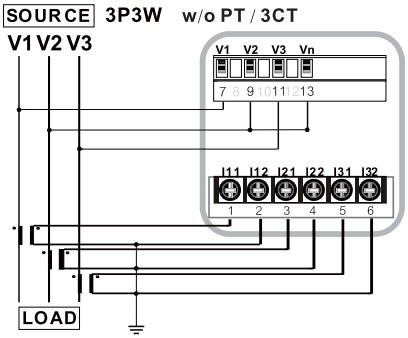

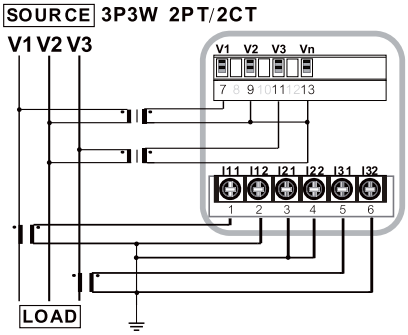

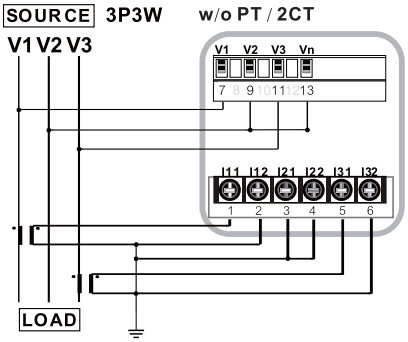

※This CT connection is available use for inverter load or normal load situation

※This CT connection is available use for inverter load or normal load situation

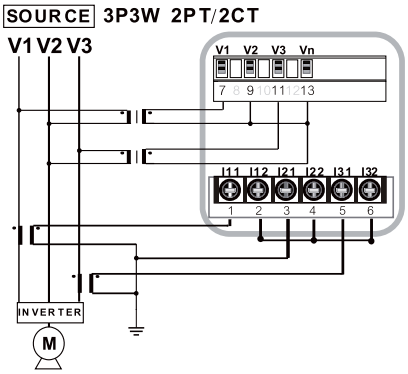

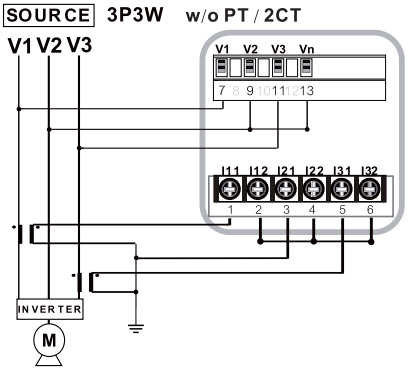

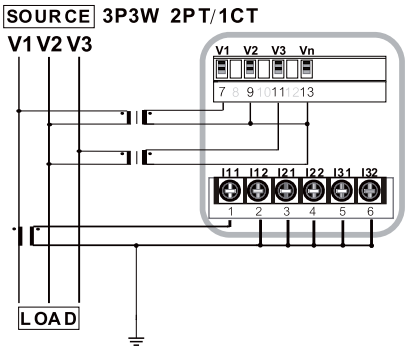

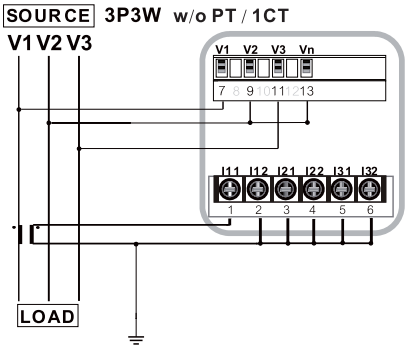

3P4W

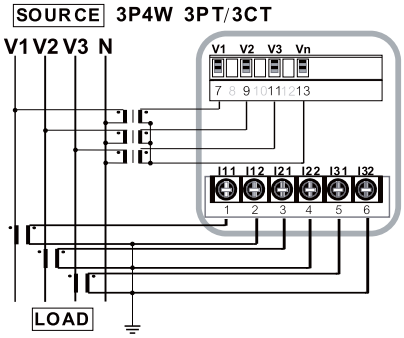

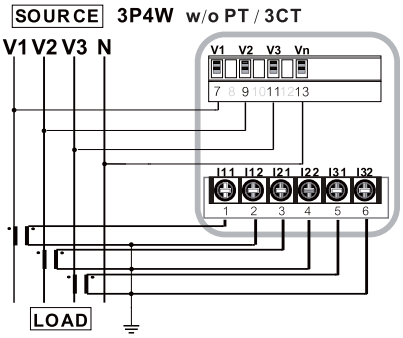

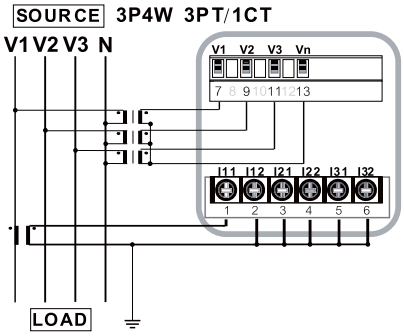

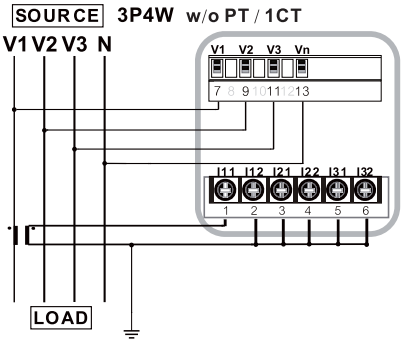

Analog output(AO)/ Pulse output (PO)

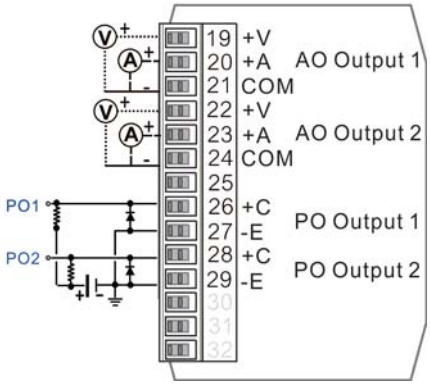

Relay output (RO)/ External Control input (ECI)

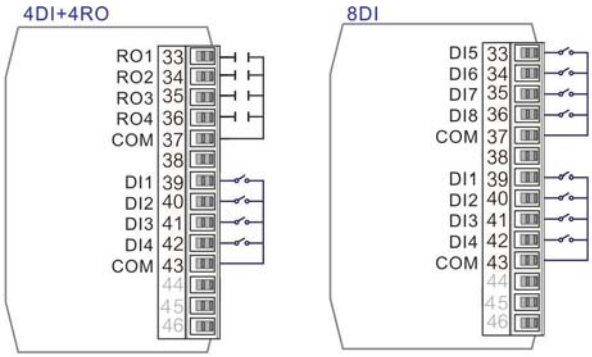

RS485 communication port